Innovation in Motion

RESISTORS & POWER SAFETY DEVICES

POWERTRAIN PRE- AND DISCHARGE SOLUTIONS FOR eMOBILITY APPLICATIONS

OUR MISSION:
TECHNOLOGIES FOR A CLEANER PLANET

ENERGY GENERATION | ENERGY TRANSMISSION | ENERGY STORAGE | ENERGY USE

PRODUCT CATALOGUE

OUR MISSION:

TECHNOLOGIES FOR A CLEANER PLANET

OUR VISION:

NO POWER WITHOUT MIBA TECHNOLOGY

We strive for product and technology leadership in technologically demanding niches along the entire energy value chain. Our products make an important contribution to the efficient and sustainable generation, transmission, storage and use of energy. They are making our customer applications even more sustainable and environmentally friendly.

Miba components accompany the entire cycle of efficient generation, transmission, storage and use of energy

ENERGY GENERATION

Windpower

Solarpower

Hydropower

Gas and diesel gensets, turbines

Fuel cells

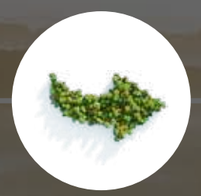

ENERGY TRANSMISSION

Efficient energy transmission

Smart grids

Compressors and pumps

Components for charging infrastructure for electric vehicles

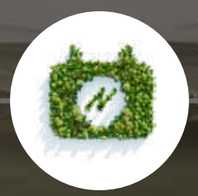

ENERGY STORAGE

Battery systems and modules

Battery components

Electrical safety components for batteries

Coating solutions for batteries

ENERGY USE

Highly efficient drive technology:

- Conventional drives
- Hybrid drives
- Fully-electric drives

Industrial applications

Innovation is what drives us

We at Miba have a passion for innovation. With our team of dedicated research and development employees around the globe, we are driving forward the latest technologies in the field of electric driving.

As a specialist in the world of power electronics, we have made it to our mission to save installation space while achieving higher performance. With our development teams, we are constantly working on individual innovations for our customers and respond to the constant changes in the markets, driven by ever-increasing environmental and performance requirements.

Benefit from our experience

As part of a joined development process, we can respond to the wishes of our customers in detail and adapt applications flexibly based on customer-specific requirements.

We are constantly working to make our products lighter, smaller and more powerful. We are happy to incorporate our development expertise and product knowledge into our customers' applications.

All components are extensively tested in our in-house laboratory. In this way, we ensure that our customers receive a high-quality product for their applications.

Continuous Improvement Process is the base for our high product quality. Every single production process is proven over the long history in manufacturing. Quality gates after every process step are mandatory to keep the high quality.

We offer automotive-compliant manufacturing, automated according to IATF 16949 certification, in both large and small series.

We produce and develop close to you: Miba has 29 production sites with 7500 employees worldwide.

State-of-the-art production lines

Miba produces resistors using state-of-the-art standards at its facilities in Kirchbach-Zerlach (Austria) and Dongguan (China). Both locations feature advanced automated manufacturing machines to ensure a seamless and efficient production process.
Our high level of automation and stable, standardized production processes are a decisive quality factor, especially in the production of resistors for the automotive industry. From the receipt of raw materials to the final product coming off the production line, automation is seamlessly integrated into every step of the process. Our state-of-the-art facilities feature automated material printers, soldering machines, wire bending machines and much more - all carefully linked together in a flawless clean room environment to ensure the highest level of quality.

We ensure the highest quality

We strive for excellence in quality. After our products are manufactured fully automatic in a clean room environment, each one is thoroughly tested in our automated end-of-line tester. Weight, size, ohmic value, load, insulation and much more are checked to ensure that we always deliver first-class quality. Following this, the resistor is printed on the underside with a thermal paste, enabling easy and swift integration for the customer.

Miba products are built to last

Our resistors are designed for up to 300,000 precharge or discharge cycles. Our high quality standards are also confirmed by numerous certifications: Miba is ISO 9001, ISO 14001, IATF 16949 and TISAX certified. Our products therefore meet the high requirements of AEC-Q200 and are ideally suited for the automotive industry.

Highly reliable PREcharge and DIScharge components for safe and secure operation

Electrically powered vehicles have various electrical energy sources. In addition to the HV-drive battery, capacitors are installed in various modules such as drive inverter, DC-DC converter and much more. The largest capacitor is located in the drive control unit, also known as the drive inverter.

Power Safety Devices

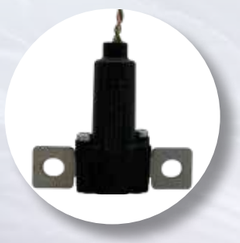

DIScharge Resistors

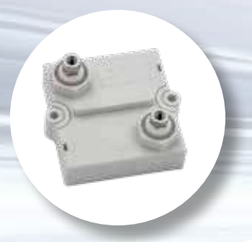

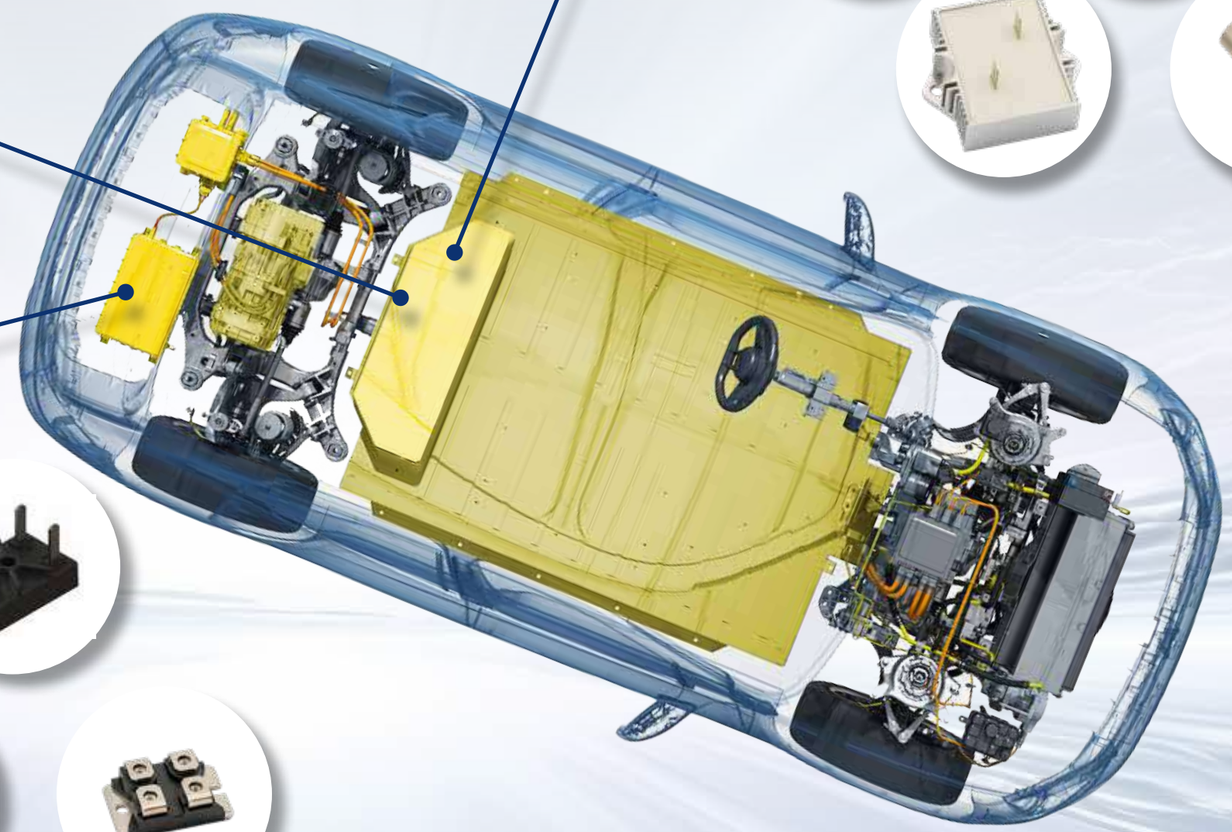

PREcharge Resistors

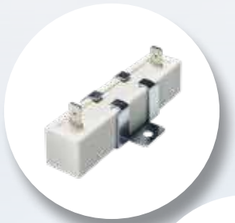

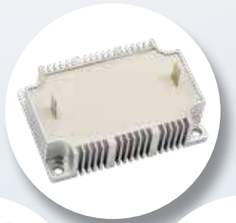

Cutting-edge function-critical elements to enhance performance and improve safety

PREcharge Resistors

High voltage systems often use pre-charged circuits to limit the inrush current. If this current is not limited and controlled, it can cause significant stress or damage to other components in the system.

A PREcharge circuit allows the current to flow in a controlled manner until the voltage level rises to a value close to the source voltage before the main contactors close. This precharging normally takes place within one second by limiting the inrush current. To limit the inrush current, power resistors are used in combination with a relay. As soon as the capacitors have reached the operating voltage, the pre-charging relay opens and interrupts the process. The driver can now drive the vehicle safely.
PREcharge resistors thus protect the system from damage, extend the service life and increase reliability.

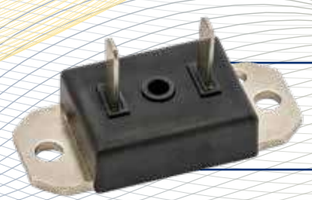

DIScharge Resistors

DIScharge resistors are used to discharge the DC link capacitors after an electric car has been switched off.

According to IEC 60204-1:2005 and other various EN standards, all capacitors and DC links must be below 60 volts within five seconds of use. To achieve this voltage level, it is possible to short-circuit the IGBTs of the inverter, transfer energy to the electric motor or use power resistors. Power resistors are the safest way to discharge, especially after a crash event. The important IGBTs are not additionally stressed by the discharge. When discharging, a distinction is made between active and passive discharging. With active discharging, there is an actively connected power resistor to bring the voltage below 60 volts. Passive discharging is carried out with power resistors, that are permanently connected to HV+ and HV-.

Fast DIScharge Resistors

The approach of various vehicle manufacturers is to discharge the vehicle within seconds in case of a crash to ensure electrically electrical safe conditions.

In the event of an accident, the vehicle manufacturer must be sure that all the energy is discharged, even if the vehicle is severely deformed. Rapid DIScharge resistors are designed for such a case in order to quickly bring the vehicle into an electrically safe state.

Pyrotechnical Switches

The energy density of electric car batteries is already very high. To further increase the range, fuel cells can be used as a range extender.

As an additional energy source, fuel cells must comply with IEC and EN regulations, which requires new discharge concepts. In crash situations, the fuel cells must also be put into an electrically safe condition, which is achieved by quickly short-circuiting the fuel cell. The Miba POWERcloser® meets precisely these requirements: it short-circuits the fuel cell within milliseconds, bringing the vehicle into an electrically safe state and thus ensuring maximum safety for the occupants and rescue staff.

Miba PREcharge Resistors

PREcharge resistors are typically used in the battery junction box to limit the charging current of the DC-Link capacitor. The PREcharge resistor must withstand the high energy pulse up to 1000 volts. Miba PREcharge resistors can withstand this single pulse event without heat sink. The products are designed and tested for extraordinary lifetime of 300.000 PREcharge pulses. Of course, all our resistors are AECQ-200 qualified. The product and electrical design can be manufactured according to customer specifications.

CWR 50

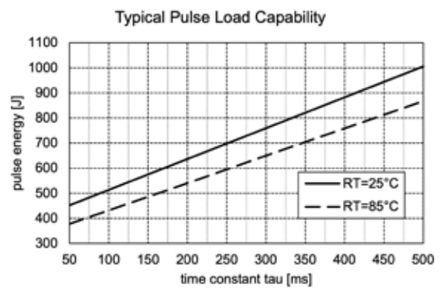

Benefits:

- Slim shape
- Robust design
- FAST-ON connection
- Optional mounting clip available

Feature	Value
Operating voltage	up to 1000 V
Ohmic range	10 - 300 Ω
Constant power rating*	15 W***
Weight**	~83 g
Rth	<11 K/W

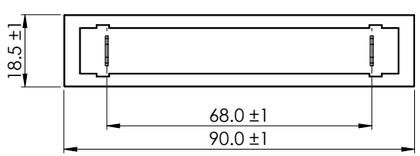

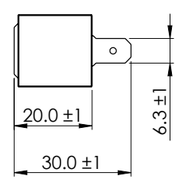

*Depending on ohmic value, features and connection type
**Depending on variants and features
***Constant power rating at 85°C

RST 100

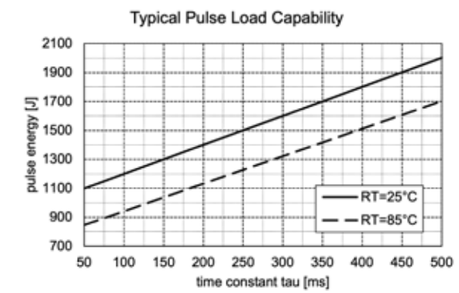

Benefits:

- Aluminum housing for better heat dissipation
- Different connection possible (FAST-ON, wires)
- Huge short time overload capability

Feature	Value
Operating voltage	1000 V
Ohmic range	10 - 300 Ω
Constant power rating*	60 W***
Weight**	~149 g
Rth	<2.8 K/W

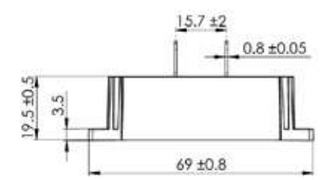

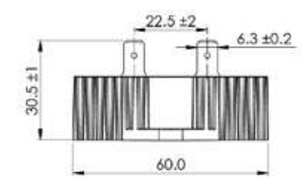

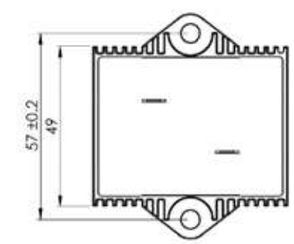

*Depending on ohmic value, features and connection type
**Depending on variants and features
***Constant power rating at 85°C

RST 150

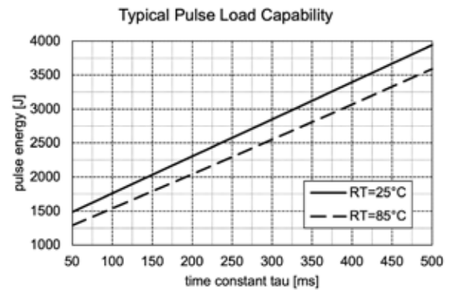

Benefits:

- Aluminum housing for better heat dissipation
- Different connection possible (FAST-ON, wires)
- High Power Resistor

Feature	Value
Operating voltage	1000 V
Ohmic range	10 - 300 Ω
Constant power rating*	80 W***
Weight**	~225 g
Rth	<2 K/W

Dimension in mm [inches]

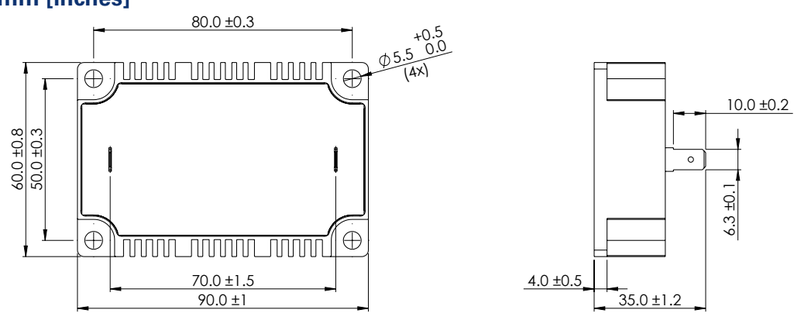

*Depending on ohmic value, features and connection type
**Depending on variants and features
***Constant power rating at 85°C

ESP 62/20

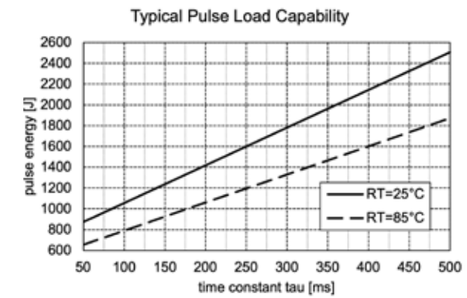

Benefits:

- Robust power resistor without heat sink requirement
- Shape of a fuse for easy integration
- Screw or snap in connection

Feature	Value
Operating voltage	1000 V
Ohmic range	1 - 1k Ω
Constant power rating*	15 W***
Weight**	~107 g
Rth	<12 K/W

Dimension in mm [inches]

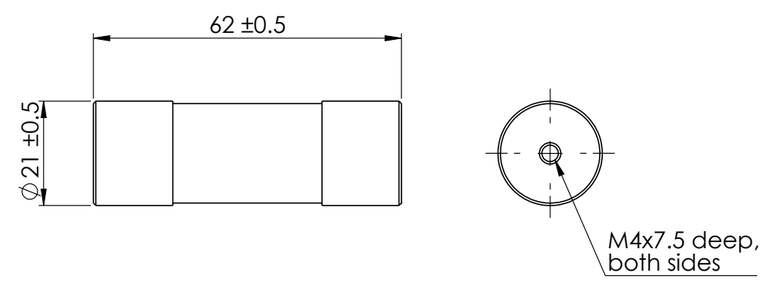

*Depending on ohmic value, features and connection type
**Depending on variants and features
***Constant power rating at 85°C

Miba DIScharge Resistors

DIScharge resistors are typically used in the inverter to discharge the DC-Link capacitor after driving. The design of our DIScharge resistors varies in the shape, size and electrical connection. Miba with its special technology for DIScharge resistors is able to adopt the resistor design to customer requirements. The non-inductive design of our resistors offers new DIScharge concepts by using a constant power DIScharge. Such a concept allows smaller resistors, thus saving in weight and size. Our DIScharge resistors are AEC-Q200 compliant. All DIScharge resistors with heat sink mount can be equipped with phase change material for a better thermal connection.

EVR 50

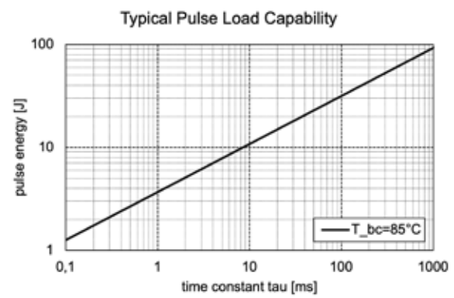

Benefits:

- Very small and lightweight
- Intelligent mounting process without screws
- Optional: active resistor, passive resistor

Feature	Value
Operating voltage	1000 V
Ohmic range	0,1 - 1M Ω
Constant power rating*	50 W***
Weight*	~6 g
Rth	<0.4 K/W

Dimension in mm [inches]

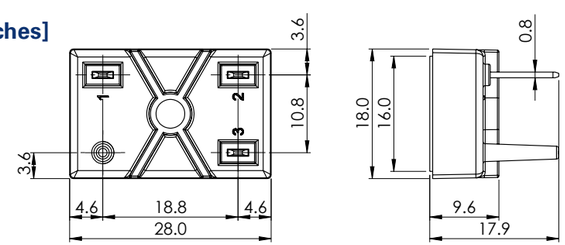

*Depending on ohmic value, features and connection type
**Depending on variants and features
***Constant power rating at 85°C

EVR 150

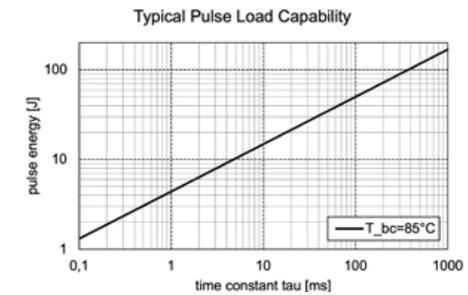

Benefits:

- Baseplate for robust heat sink connection
- Different PCB connection (FAST-ON, wire, press-fit, solder pins)
- Great heat dissipation

Feature	Value
Operating voltage	1000 V
Ohmic range	0,1 - 1M Ω
Constant power rating*	150 W***
Weight**	~16 g
Rth	<0.4 K/W

Dimension in mm [inches]

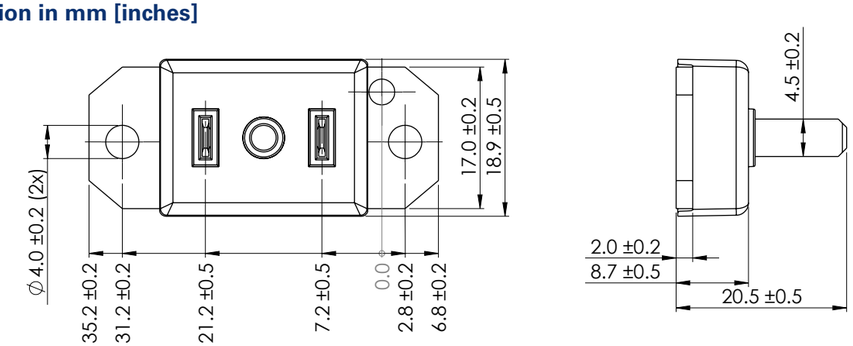

*Depending on ohmic value, features and connection type
**Depending on variants and features
***Constant power rating at 85°C

EVR 250

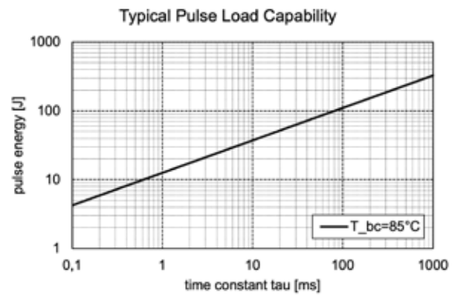

Benefits:

- Excellent pulse load capability
- Different PCB connection (FAST-ON, wire, press-fit, solder pins)
- Optional: active resistor, passive resistor, temperature sensor

Feature	Value
Operating voltage	1000 V
Ohmic range	0,1 - 1M Ω
Constant power rating*	250 W***
Weight**	~23 g
Rth	<0.2 K/W

Dimension in mm [inches]

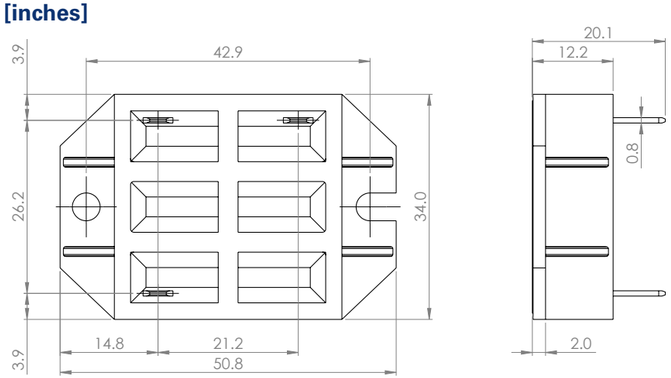

*Depending on ohmic value, features and connection type
**Depending on variants and features
***Constant power rating at 85°C

UXC 800

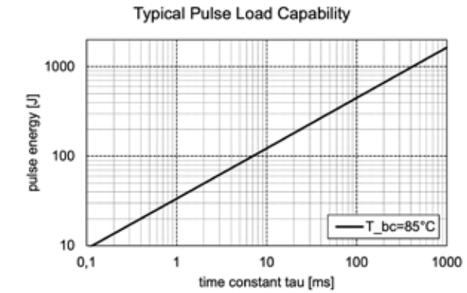

Benefits:

- Powerful DIScharge resistor
- Different PCB connection (FAST-ON, wire, press-fit, solder pins, screws)
- Optional: active resistor, passive resistor, temperature sensor

Feature	Value
Operating voltage	5000 V
Ohmic range	0,1 - 1M Ω
Constant power rating*	800 W***
Weight**	~120 g
Rth	<0.2 K/W

Dimension in mm [inches]

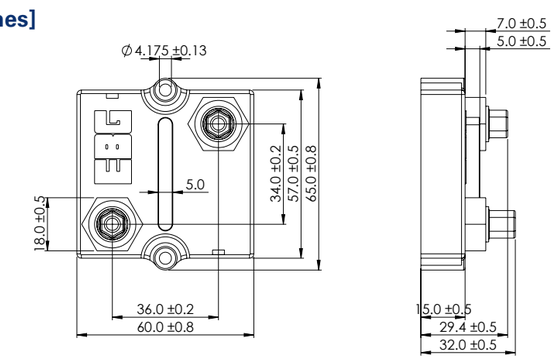

*Depending on ohmic value, features and connection type
**Depending on variants and features
***Constant power rating at 85°C

LXP 100

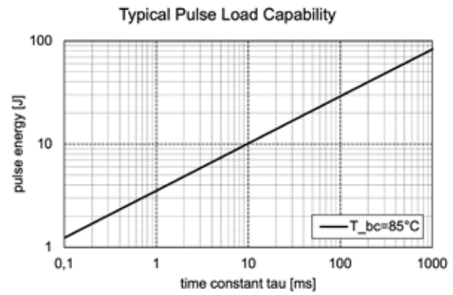

Benefits:

- Small and lightweight
- Easy PCB mount with solder pins possible
- Fast heat sink connection with clip or screw

Feature	Value
Operating voltage	up to 1000 V
Ohmic range	0,1 - 1M Ω
Constant power rating*	100 W***
Weight**	~4 g
Rth	<0.5 K/W

Dimension in mm [inches]

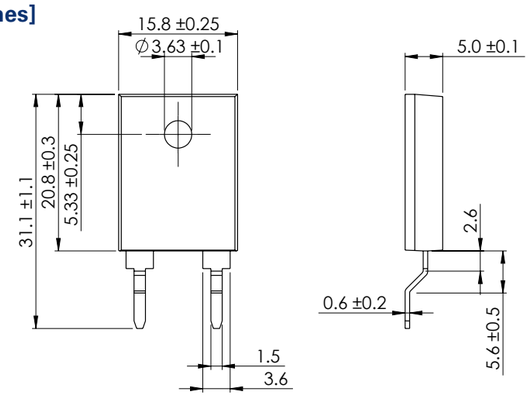

*Depending on ohmic value, features and connection type
**Depending on variants and features
***Constant power rating at 25°C

PXP 200 / HXP 200

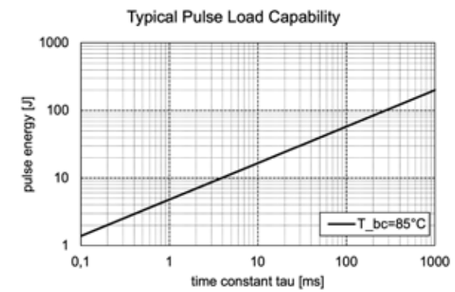

Benefits:

- All-round 200 W permanent power resistor
- Different PCB connection (FAST-ON, wire, press-fit, solder pins, screws)
- Optional: active resistor, passive resistor, temperature sensor

Feature	Value
Operating voltage	1000 V
Ohmic range	0,1 - 1M Ω
Constant power rating*	200 W***
Weight**	~26 g
Rth	<0.35 K/W

Dimension in mm [inches]

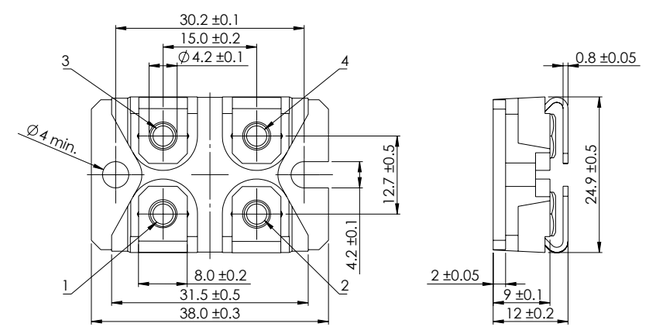

*Depending on ohmic value, features and connection type
**Depending on variants and features
***Constant power rating at 85°C

Miba Fast-DIScharge Resistor

Fast DIScharge resistors are typically used in crash applications to bring the car in an electrical safe condition after a car crash. This is essential for the safety of both passengers and emergency responders, ensuring a secure environment for rescue operations. Engineered for singular pulses, these resistors are designed to safely deactivate (reaching high resistance) upon encountering subsequent electrical pulses.

FDR

Benefits:

- Safe open function
- Low ohmic values
- Fast open time

Feature	Value
Operating voltage	1000 V
Ohmic range	0,1 - 1 Ω
Typical pulse load capability	1000 J
Weight	~40 g

Dimension in mm [inches]

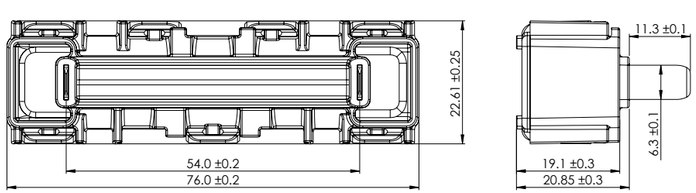

Miba POWERcloser®

The areas of application of the Miba POWERcloser® are multifaceted. It can be used at electric vehicle powered by a fuel cell to bring the vehicle in an electrical safe condition in the event of a crash or wherever an emergency shutdown is required. Activated by a single pulse, typically from the airbag control unit, this irreversible device promptly secures into position and remains so. Its compact and lightweight design facilitates rapid operation within milliseconds. Moreover, it finds utility as a bypass switch in various industrial settings.

EVC-FC

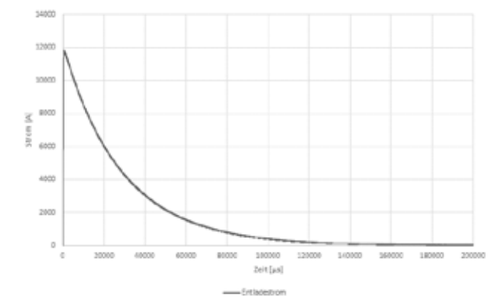

Benefits:

- Hermetically sealed
- High current profile
- Easy and free configurable

Feature	Value
Voltage	900 VDC
Closing capability	11,5 kA / I2t ~2 MAs
Non reversable device	Yes
Weight*	~87 g
Ignitor	According to AK-LV16 / USCAR-28

Dimension in mm [inches]

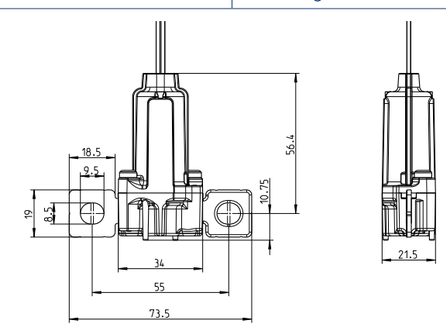

*Depending on variants and features

Customized Resistor Solution

We develop the optimal resistor solution for you

Throughout the entire development process, from concept development to final implementation, we work closely and transparently with our customers. This allows us to respond flexibly to customer requirements and offer customized solutions. Regardless of whether it is a more compact design or specific material requirements. We will be happy to advise you!

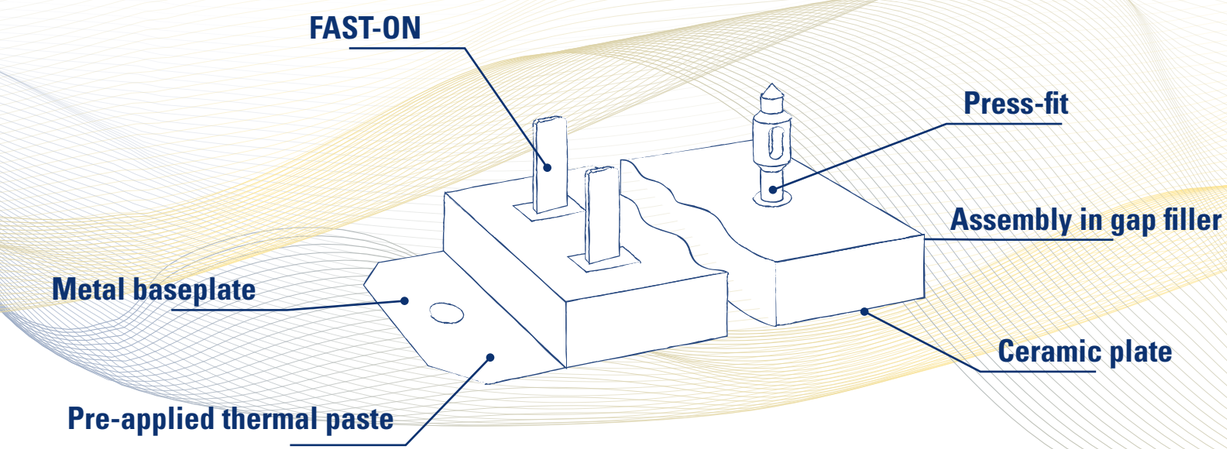

Electrical connection:

Electrical connection of the power resistor is important and differs for every customer requirement. Thus- our power resistors are designed for maximum flexibility. FAST-ON, wires, solder pins, screws, press-fit or any other are possible.

Heat sink:

Our DIScharge resistors require a heat sink connection to ensure the optimal heat dissipation. This is crucial to provide the promised resistor power. We offer power resistors with or without copper baseplate for maximum robustness and are able to prefabricate the thermal paste on the product for a fast final assembly process.

More than one power resistor:

Most of our resistor housing capabilities offer plenty of room to add more functions. We are happy to fulfill your specific requirements for the product. In addition to the active DIScharge resistor, we are also prepared to implement the passive DIScharge resistor. Furthermore, we can integrate a thermal sensor as an additional safety function. Simply let us know your requirements and we will incorporate them into the overall package while optimizing your costs.

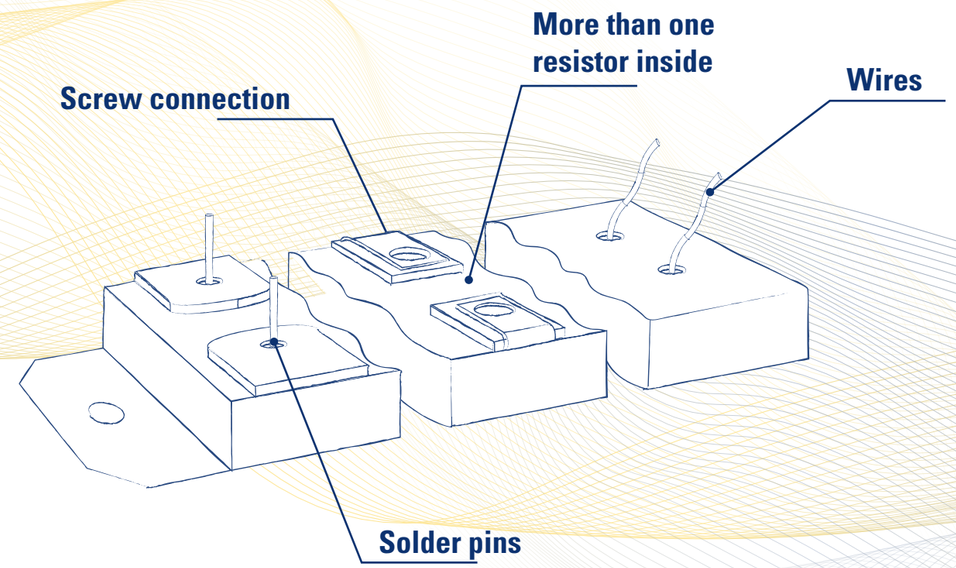

Miba technologies for eMobility

Broad portfolio for high-performance drives

With our innovations and products, we are actively shaping the mobility of tomorrow. As an innovative partner with decades of automotive experience, we also transfer our comprehensive know-how from the conventional powertrain to electromobility applications. Our knowledge of NVH (Noise, Vibration, Harshness) and gearing can thus be used for components in e-axles such as planetary gears or high-strength actuators, for parking brakes or clutch packs.

As a specialist in the field of power electronics and battery technology, we have made it our mission to save installation space while achieving higher performance.

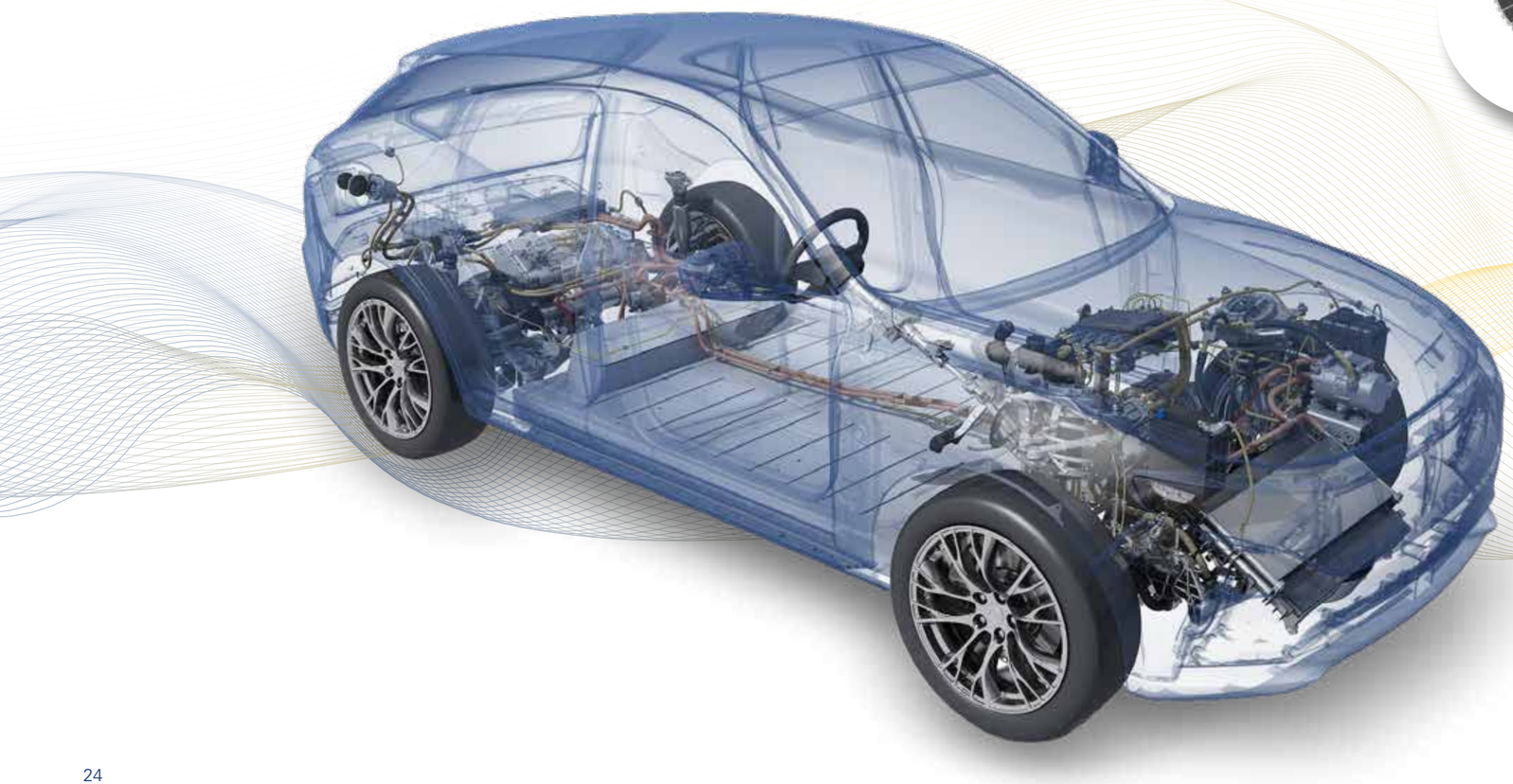

STATOR MANUFACTORING

SINTERED PARTS

PRE- & DISCHARGE RESISTOR

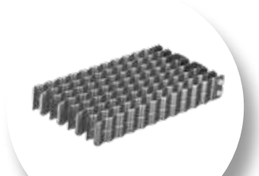

BATTERY COMPONENTS

FRICTION MATERIALS

POLE WHEELS

BATTERY SYSTEMS

COATINGS

POWER SAFETY DEVICES

We develop and produce close to you

Miba is a strong partner of the automotive business. We work closely together with our automotive customers around the world. Our international network with 29 production sites and many sales offices in Europe, Americas and Asia offers direct support. Miba is ISO 9001 and IATF 16949 certified. Our products are AEC-Q200 compliant and meet the automotive standards. Industry standard documentation such as PPAP is available on request. Our experienced sales team is more than happy to get in touch with you and speak about our EV-product portfolio. Contact us!

Miba Group

Miba Power Electronics Group

Miba Resistors Austria
Kirchbach, Austria
St. Stefan, Austria

Miba Cooling Austria
Ligist, Austria

Miba Electronics Slovenia
Šentjernej, Slovenia

Miba Resistors US
Middletown, PA, USA

EBG China
Shenzhen Area, China

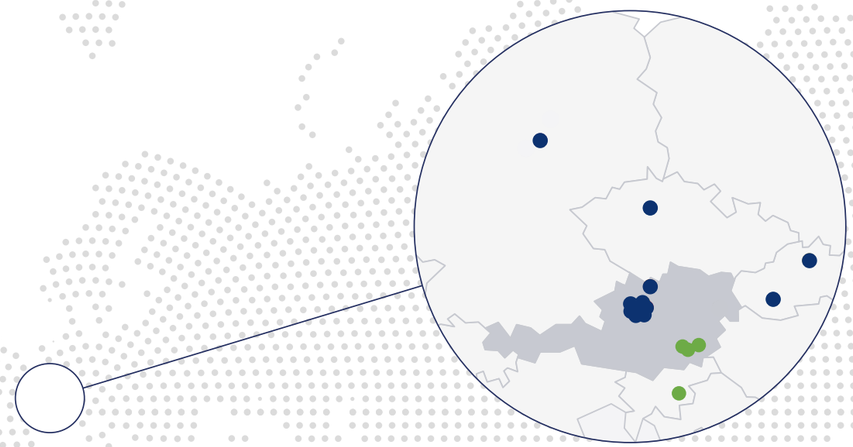

DISCLAIMER

The given statements and information herein are recommendations for the use of our products and are based on our experience in combination with applicable technical standards. They are for guidance only and do not represent any assurance of characteristics or warranty commitments for the products or their suitability for specific applications. The suitability of the products for the intended use by the user depends on different boundary conditions and influencing factors and is to be assessed exclusively by the user.

DISCLAIMER:
NO WARRANTY OR GUARANTEE, EXPRESS OR IMPLIED, IS MADE WITH RESPECT TO THE PRODUCTS, DESIGNS, DATA, INFORMATION DESCRIBED OR ANY INTELLECTUAL PROPERTY CONTAINED THEREIN. ANY WARRANTY OR GUARANTEE OF MERCHANTABILITY OR FITNESS FOR A PARTICULAR PURPOSE IS ALSO EXCLUDED.
The given statements and information herein reflect the current status at the time of publication. Typing or printing errors cannot be excluded. This publication shall not be reprinted or reproduced in whole or in part in any form or by any means without the express written permission of Miba.

CONTACT

Miba Energy Holding GmbH
Dr.-Mitterbauer-Str. 3
4663 Laakirchen
Austria
P: + 43 7613 25 41-0
M: powerelectronics@miba.com
www.miba.com