Innovation in Motion

MIBA RESISTORS PRODUCT CATALOG

ISSUE 2024

former EBG RESISTORS

OUR MISSION:

TECHNOLOGIES FOR A CLEANER PLANET

OUR VISION:

NO POWER WITHOUT MIBA TECHNOLOGY

We develop the optimal resistor solution for your requirements.
As a leading international manufacturer of high power and high voltage resistors, Miba Resistors ensures that energy is converted and transmitted safely and efficiently. With strong innovative power, our development teams are always working towards smaller and more powerful resistors to keep up with the ever-changing demands. Our resistors are available in various power and voltage ranges, sizes, tight tolerances and ohmic values. With our technical expertise and years of experience Miba Resistors is able to react quickly and flexibly to suggest a solution to meet your changing needs.

Miba components accompany the entire cycle of efficient generation, transmission, storage and use of energy

ENERGY GENERATION

Windpower

Solarpower

Hydropower

Gas and diesel gensets, turbines

Fuel cells

ENERGY TRANSMISSION

Efficient energy transmission

Smart grids

Compressors and pumps

Components for charging infrastructure for electric vehicles

ENERGY STORAGE

Battery systems and modules

Battery components

Electrical safety components for batteries

Coating solutions for batteries

ENERGY USE

Highly efficient drive technology:

- Conventional drives
- Hybrid drives
- Fully-electric drives

Industrial applications

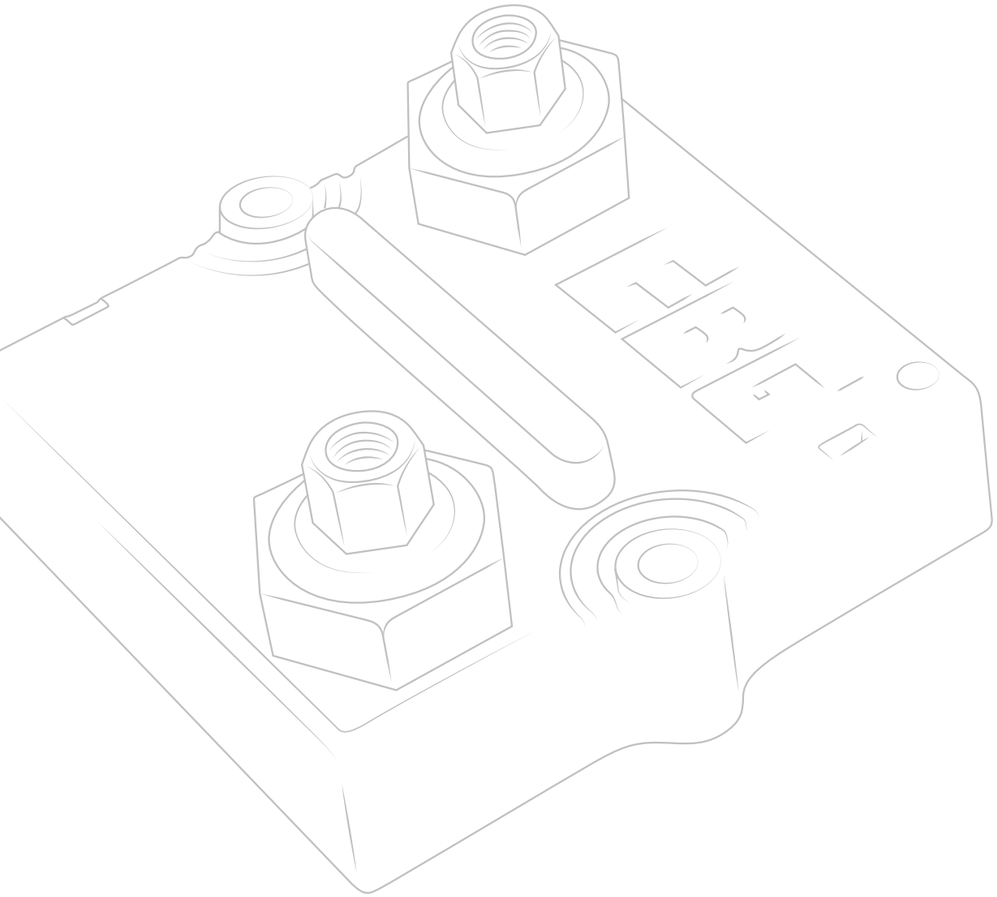

ISO 9001:2015
ISO 14001:2015
IATF 16949:2016

Miba Resistors AUSTRIA GmbH
sales.mra@miba.com
T +43 3116 2625 0

Miba Resistors US LLC
sales@mibaresistors.com
T +1 717 737 9877

www.miba-resistors.com

Disclaimer

The given statements and information herein are recommendations for the use of our products and are based on our experience in combination with applicable technical standards. They are for guidance only and do not represent any assurance of characteristics or warranty commitments for the products or their suitability for specific applications. The suitability of the products for the intended use by the user depends on different boundary conditions and influencing factors and is to be assessed exclusively by the user.

DISCLAIMER:
NO WARRANTY OR GUARANTEE, EXPRESS OR IMPLIED, IS MADE WITH RESPECT TO THE PRODUCTS, DESIGNS, DATA, INFORMATION DESCRIBED OR ANY INTELLECTUAL PROPERTY CONTAINED THEREIN. ANY WARRANTY OR GUARANTEE OF MERCHANTABILITY OR FITNESS FOR A PARTICULAR PURPOSE IS ALSO EXCLUDED.

The given statements and information herein reflect the current status at the time of publication. Typing or printing errors cannot be excluded. This publication shall not be reprinted or reproduced in whole or in part in any form or by any means without the express written permission of Miba Resistors.

Content

High Voltage Resistors **7**
Series SGT 8
Series SGP / OGP 10
Series SHP 13
Series SSP / OSP 14
Series OSX / SSX / SOX 17
Series PHV 19
Series MTX 968 20
Series MTX 969 21
Series MTX 969 W 22
Series MTX 967 23
Series FBX / FSX 24
Series FPX / FLX 26

Power Resistors **27**
Series LXP-18 TO-220 28
Series LXP-20 TO-220 30
Series LXP-100 B TO-247 32
Series LXP-150 TO-247 35
Series LHP-150 TO-247 36
Series MXP 35 TO-220 37
Series MSP 35 SMD TO-220 39
Series AXP-50 41
Series AXP-100 B 42
Series AXP-150 43
Series AXS-600 / AXF-600 / AXP-600 45
Series GXP 120, SOT-227 47
Series HPP 150 49
Series VHP 51
Series HPS 150 53
Series HXP 200, SOT-227 55
Series HXP-600 57
Series PXP 200, SOT-227 (solder pin) 58
Series LPP-250 60
Series WLL-320 61
Series ACP-100 63
Series RPS-100 64
Series AXM 65

Ultra-High-Power Resistors **66**
Series UXP®-350 (replaces the previous UXP-300) 67
Series UXP®-600 70
Series UXP®-800 73
Series UXP®-2000 76
Series UPT®-400 78
Series UPT®-600 79
Series UPT®-800 81
Series UPT®-2000 83
Series ULX®-600 (very low component height) 85
Series ULX®-800 (very low component height) 87
Series ULX®-2000 89
Series UXM-400 91

Voltage Dividers and Networks **92**
Series MTX 2000 93
Series HVT 94
Series MTX 1000 95
Series 1776-X 96

Metal Film **98**
Series UPR / UPSC 99
Series EE / NE 100

Shunts, Pulse Load, Carbon, Water-cooled, Pre-charge Resistors , Miba PowerCloser **101**
Series PCS 102
Series ESP 103
Series CSR 104
Series LCR6000 105
Series RST5N 106
Series Miba PowerCloser 107

Long time storage condition

General Recommendation:

Take attention when the resistors are stored before usage!
Environmental influences like high or low temperature, humidity, corrosive gases, etc. as well the package function.

For high voltage cylindrical and flat resistors environmental might affect the solderability of the terminals (for detailed information, please contact us).

Recommendations:

- Storage conditions are in between 10 °C and 35 °C at a relative humidity in between 35% and 75%.
- Do not store next to or together with corrosive gases. Solderability as well as the electrical and mechanical performance of the resistors might get negatively impacted by such toxic gases.
- No direct exposure to sunlight and dust.
- Use caution to avoid deforming the connectors or degrading the component.
- Storage of resistors in the original packages until usage.
- For high voltage cylindrical and flat resistors avoid direct contact between hands and parts. Avoid touching the resistors directly with hand.

Tolerances and TCR shortcuts:

Tolerances	
±20 %	- M
±10 %	- K
±5 %	- J
±1 %	- F
±0.5 %	- D
±0.25 %	- C
±0.1 %	- B
±0.05 %	- A5
±0.02 %	- A2

TCR	EBG	MTX
±250 ppm/°C	- B7	- P
±200 ppm/°C	- B8	- L
±150 ppm/°C	- B9	- M
±100 ppm/°C	- C1	- S
±50 ppm/°C	- C2	- F
±25 ppm/°C	- C3	- E
±15 ppm/°C	- C5	- A
±10 ppm/°C	- C6	- T
±5 ppm/°C	- C7	- U

sales.mra@miba.com · US: sales@mibaresistors.com

High Voltage Resistors

SGT
SGP / OGP
SHP
SSP / OSP
OSX / SSX / SOX
PHV
MTX 968
MTX 969
MTX 969 W
MTX 967
FBX / FSX
FPX / FLX

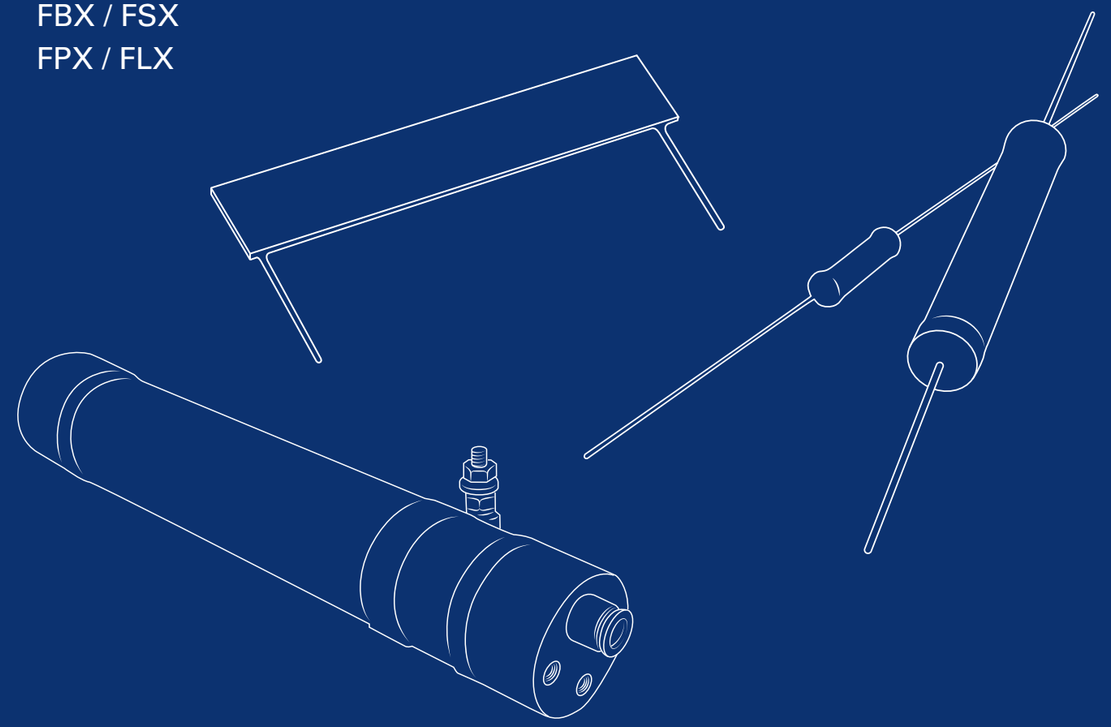

Series SGT

TC of ±25 ppm/°C, US Patent-No. 4,859,981

The SGT series meet the most stringent requirements regarding temperature coefficient in connection with high stability performance at high operating voltages. The low temperature coefficient minimizes ohmic value change generated through the warm-up due the power dissipation. Typical applications are medical systems like X-ray, nuclear spin tomography, as well as power supplies or instruments.

Features

- up to 48 kV operating voltage
- Non-Inductive design
- ROHS compliant
- **Voltages up to 60% higher than the values listed "S-Version"**

Technical Specifications

Resistance value	100 KΩ ≤ 1 GΩ (see model specifications)
Resistance tolerance	±1 % to ±10 % standard ±0.1 % to ±0.5 % on special request for limited ohmic values**
Temperature coefficient	±25 ppm/°C referenced to 25°C, ΔR taken at -15°C and +85°C (lower TCR on special request for limited ohmic values)
Max. operating temperature	+ 225 °C
Voltage coefficient	-0.2 ppm/V max. as to MIL-Std-202, method 309, 10 kV DC max.
Dielectric strength	1,000 V DC
Insulation resistance	10 GΩ min. at 1,000 V DC
Overload / overvoltage	5x rated power with applied voltage not to exceed 1.5x maximum continuous operating voltage for 5 sec. ΔR 0.20 % max.
Load Life	1,000 hours at rated voltage not exceeding rated power, typical ΔR ("S") = 0.1 %, ΔR=0.25 % max.
Load life stability	0.25 % per 1,000 hours at +125°C
Moisture resistance	MIL-Std-202, method 106, ΔR 0.4 % max.
Thermal shock	MIL-Std-202, method 107, Cond. B, ΔR 0.20 % max.
Encapsulation	**standard coating: silicone conformal** we recommend 2xpolyimide coating for use in oil and potted applications (ask for details)
Lead material	OFHC copper, tin-plated
Weight	depending on model no. (ask for details)

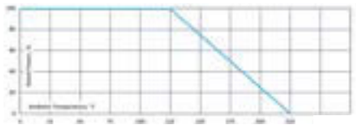

How to make a request

Model no._Ohmic Value_Tolerance_TCR

For example:
SGT-52 1M 1% 25ppm

Example for higher voltage or optional coating:
SGT-26-S 45M 10% 25ppm or
SGT-26 600K 1% 25ppm 2xpolyimide coating

Model Specifications

Model no.	Wattage	Max. continuous operating voltage	Resistance values			Dimensions in millimeters (inches)		
			Min. Ω	Min. ("S") Ω	Max. (1% Tol.) Ω	A ±0.50 ±0.02	B ±0.50 ±0.02	C ±0.05 ±0.002
SGT-26	1.0	4,000	100 K	40M	250M	26.9 (1.059)	8.20 (0.323)	1.00 (0.040)
SGT-32	1.25	5,000	120 K	50M	300M	33.00 (1.300)	8.20 (0.323)	1.00 (0.040)
SGT-39	1.5	6,000	150 K	60M	400M	39.50 (1.555)	8.20 (0.323)	1.00 (0.040)
SGT-52	2.0	10,000	200 K	80M	500M	52.10 (2.051)	8.20 (0.323)	1.00 (0.040)
SGT-78	3.0	15,000	300 K	120M	700M	77.70 (3.059)	8.20 (0.323)	1.00 (0.040)
SGT-103	4.0	20,000	400 K	160M	1G	102.90 (4.051)	8.20 (0.323)	1.00 (0.040)
SGT-124	5.0	25,000	500 K	190M	1G	123.70 (4.870)	8.20 (0.323)	1.00 (0.040)
SGT-154	6.0	30,000	600 K	250M	1G	153.70 (6.051)	8.20 (0.323)	1.00 (0.040)

** If you need very tight tolerances (±0.1 % to ±0.5 %), we recommend not to use the full power rating but rather to select the next large size to achieve ultimate stability (ask for details)

The above spec. sheet features our standard products. For further options please contact your local Miba Resistors representative

sales.mra@miba.com · US: sales@mibaresistors.com

Series SGT

Model overview

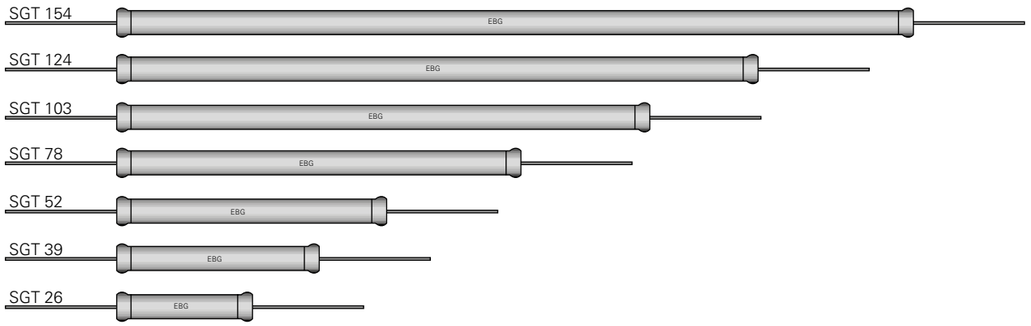

Dimensions in mm [inches]

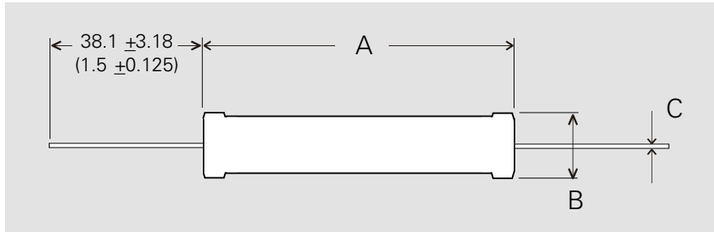

The above spec. sheet features our standard products. For further options please contact your local Miba Resistors representative.

sales.mra@miba.com · US: sales@mibaresistors.com

Series SGP / OGP

TC of ±80 ppm/°C combined with precision tolerances,
wide ohmic range / U.S. Patent-No. 4,859,981

The series employs our special METOXFILM, which demonstrates excellent stability and a wide resistance range. Power and voltage ratings are for continuous operation and have all been pretested for steady-state performance as well as momentary overload conditions.

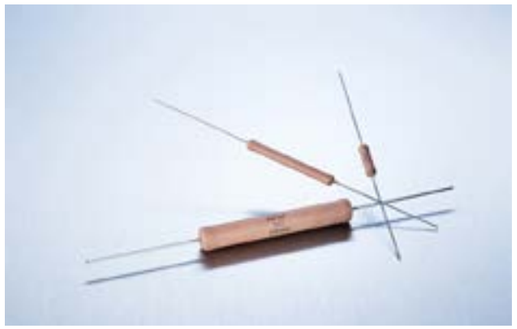

Features

- up to 48 kV operating voltage
- Non-Inductive design
- ROHS compliant
- **Voltages up to 60% higher than the values listed – "S"-Version**

Technical Specifications

Resistance value	100 Ω ≤ 10 GΩ (see model specifications)
Resistance tolerance	±1 % to ±10 % standard down to ±0.1 % on special request for limited ohmic values
Temperature coefficient	±80 ppm/°C (at +85°C ref. to +25°C) down to ±25 ppm/°C or lower on special request for limited ohmic values and model no.
Max. operating temperature	+ 225 °C
Voltage coefficient	(typical) see diagram page 12
Dielectric strength	1,000 V DC max. (25°C, 75 % relative humidity)
Insulation resistance	10 GΩ min. at 1,000 V DC
Overload / overvoltage	5x rated power at 125°C (referenced to specified power at +125°C) with applied voltage not to exceed 1.5x maximum continuous operating voltage for 5 sec. ΔR 0.5 % max.
Load life	1,000 hours at 125°C and rated power, components with 1 % tol. ΔR 0.2 % max., extended range ("S") ΔR = 0.5 % max.
Load life stability	typical ±0.02 % per 1,000 hours
Moisture resistance	MIL-Std-202, method 106, ΔR 0.4 % max.
Thermal shock	MIL-Std-202, method 107, Cond. C, ΔR 0.25 % max.
Encapsulation	**standard: silicone coating** other coating options (like 2xpolyimide, glass) available on request
Other terminals avaiblabe	screw end caps [6/32", M4 (torque max. 1 Nm), customer-specific], golden leads with diameter 0,8 mm availabe for SGP series (ask for details)
Lead material	OFHC copper, tin-plated
Weight	depending on model no. (ask for details)

Miba Resistors Non-Inductive design offers an outstanding advantage over other techniques. The design incorporates a unique method of DIGITAL TRIMMING to value. Other less desirable methods include an "analog" method of abrading and removing the resistive material, which frequently results in a weak seation. Miba Resistors patented process avoids this potential problem.

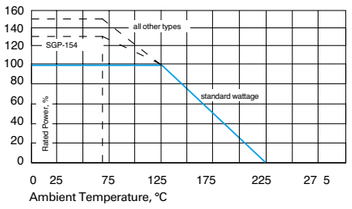

Dimensions in mm [inches]

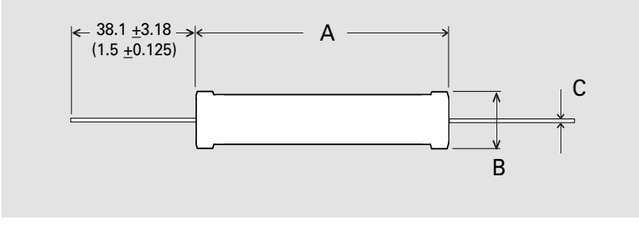

How to make a request

Model.no_Ohmic value_Tolerance_TCR

For example:
SGP-103 10M 1% 80ppm or
OGP-20 10M 5% 25ppm

Example for high voltage:
SGP-154-S 300M 2% 80ppm or
OGP-39-S 100M 1% 25ppm

The above spec. sheet features our standard products. For further options please contact your local Miba Resistors representative
sales.mra@miba.com · US: sales@mibaresistors.com

Series SGP / OGP

Model Specifications

Model no.	Wattage 25°C	Wattage 75°C	Wattage 125°C	Max. kV	Max. kV "S" **	Resistance values Min. Ω	Resistance values Max. Ω	"S"-Version max.	Dimensions in millimeters (inches) A ±0.50 ±0.02	B ±0.50 ±0.02	C ±0.05 ±0.002
OGP-13	1.0	1.0	0.60	1.5	2.4	100	50 M	500 M	13.30 (0.524)	4.20 (0.165)	0.60 (0.024)
OGP-20	1.5	1.5	1.00	2.0	3.2	200	100 M	1 G	19.70 0.776)	4.20 (0.165)	0.60 (0.024)
OGP-26	1.9	1.9	1.25	4.0	6.4	300	150 M	2 G	26.20 (1.031)	4.20 (0.165)	0.60 (0.024)
OGP-30	2.5	2.5	1.50	5.0	8.0	500	250 M	3 G	32.30 (1.272)	4.20 (0.165)	0.60 (0.024)
OGP-39	3.0	3.0	2.00	6.0	9.6	700	300 M	5 G	39.40 (1.551)	4.20 (0.165)	0.60 (0.024)
OGP-52	3.3	3.3	2.50	10.0	12.0	400	2 G	-	49.50 (1.949)	4.20 (0.165)	0.60 (0.024)
SGP-20	2.5	2.5	1.50	3.0	4.8	200	250 M	1 G	20.20 (0.795)	8.20 (0.323)	1.00 (0.040)
SGP-26	3.7	3.7	2.50	4.0	6.4	250	300 M	1 G	26.90 (1.059)	8.20 (0.323)	1.00 (0.040)
SGP-32	4.5	4.5	3.00	5.0	8.0	300	400 M	1.5 G	33.00 (1.3)	8.20 (0.323)	1.00 (0.040)
SGP-39	5.2	5.2	3.50	8.0	12.8	400	500 M	1.5 G	39.50 (1.555)	8.20 (0.323)	1.00 (0.040)
SGP-52	7.5	7.5	5.00	10.0	16.0	500	750 M	2.5 G	52.10 (2.051)	8.20 (0.323)	1.00 (0.040)
SGP-78	11	11	7.50	15.0	24.0	900	1 G	4 G	77.70 (3.059)	8.20 (0.323)	1.00 (0.040)
SGP-103	12	12	8.00	20.0	32.0	1K2	1 G	2 G	102.90 (4.051)	8.20 (0.323)	1.00 (0.040)
SGP-124	15	15	10.00	25.0	40.0	1K5	1 G	8 G	123.70 (4.870)	8.20 (0.323)	1.00 0.040
SGP-148	30	30	20.00	45.0	-	10 K	3 G	10 G	148.00 (5.83)	16.00 (0.63)	- -
SGP-154	20	20	15.00	30.0	48.0	2 K	2 G	10 G	153.70 (6.051)	8.20 (0.323)	1.00 (0.040)

** Our resistors are designed for operation in air and non-aggressive atmosphere.
For special applictions like oil, casting, molding, SF6, etc., please contact us.

OGP series overview

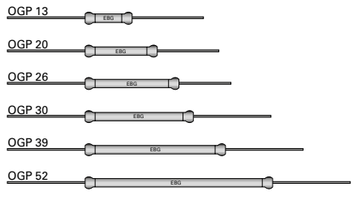

SGP series overview

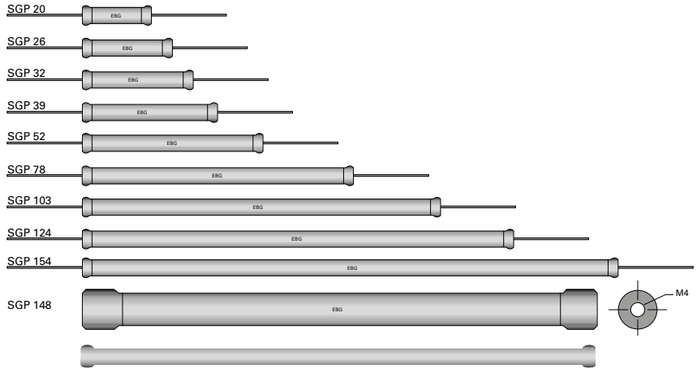

All SGP and SGT types (except 148) are also available with M4 oder 6/32 screw end caps. Attention: total length increases when screw end caps are used!

No coating on end areas!

The above spec. sheet features our standard products. For further options please contact your local Miba Resistors representative.
sales.mra@miba.com · US: sales@mibaresistors.com

Series SGP / OGP

Typical Voltage Coefficient for SGP series (in ppm per volt)

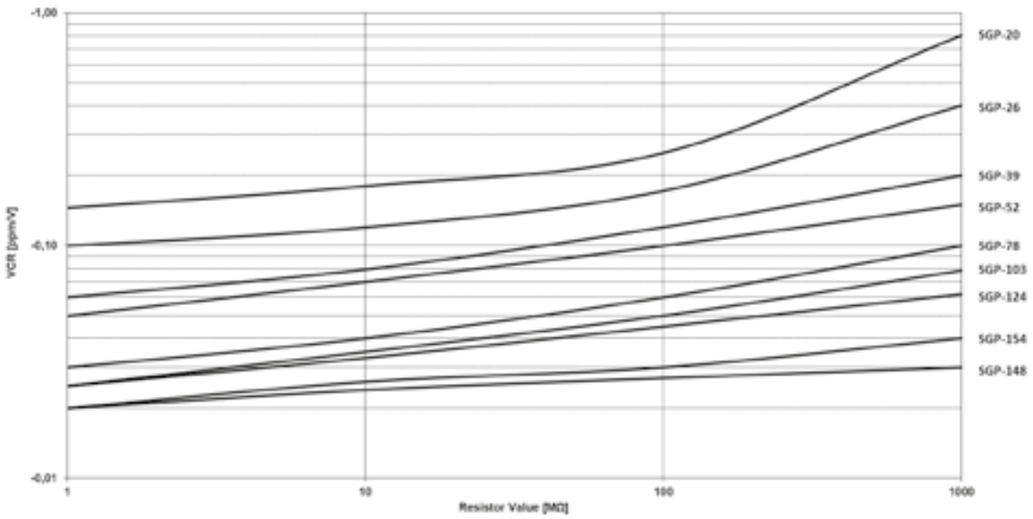

Example:
SGP-154 with 100 MΩ has a typical voltage coefficient of -0,03 ppm/V.

The above spec. sheet features our standard products. For further options please contact your local Miba Resistors representative
sales.mra@miba.com · US: sales@mibaresistors.com

Series SHP

Overall stability ±5 ppm/°C from +25°C to +65°C (incl. VCR & TCR)

We developed new material combinations and processing methods which make it possible to achieve a TCR (thermal coefficient of resistance) of up to ±5 ppm while maintaining the minimal VCR (voltage coefficient of resistance).

Features

- up to 10 kV operating voltage
- Non-Inductive design
- ROHS compliant

Technical Specifications

Resistance value	100 MΩ ≤ 250 MΩ (other values on special request)
Resistance tolerance	±1 % standard (lower on special request for limited ohmic values)
Temperature coefficient	±5 ppm/°C from +25°C to +65°C in 10 degree steps (incl. VCR & TCR) referenced to 25°C
Maximum working voltage	10 kV DC
Dielectric strength	≤ 10 kV DC based on the coating
Insulation resistance	10 GΩ min. at 1,000 V DC
Power rating	up to 1 W
Load life	1,000 hours at rated power at 70°C, ΔR 0.20 % max.
Load life stability	0.20 % per 1,000 hours at 70°C
Moisture resistance	MIL-Std-202, method 106, ΔR 0.4 % max.
Thermal shock	MIL-Std-202, method 107, Cond. A, ΔR 0.20 % max.
Encapsulation	**standard coating: silicone conformal** we recommend 2xpolyimide coating for use in oil and potted applications (ask for details)
Lead material	OFHC copper, tin-plated
Weight	depending on model no. (ask for details)

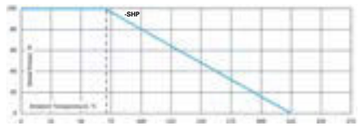

How to make a request

Model no._Ohmic value_Tolerance

For example:
SHP-52 150M 1%

Model Specifications

Model no.	Wattage	Max. kV	Resistance values		Dimensions in millimeters (inches)		
			Min. Ω	Max. Ω	A ±0.50 ±0.02	B ±0.50 ±0.02	C ±0.05 ±0.002
SHP-39	0.6	8	100 M	250 M	39.50 (1.555)	8.20 (0.323)	1.00 (0.040)
SHP-52	1	10	100 M	250 M	52.10 (2.051)	8.20 (0.323)	1.00 (0.040)
SHP-78	2.25	15	100 M	250 M	77.60 (3.055)	8.20 (0.323)	1.00 (0.040)

Dimensions in mm [inches]

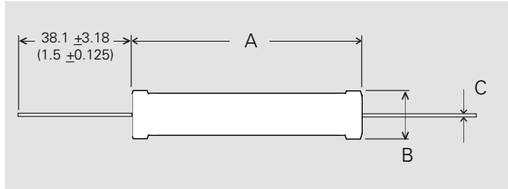

The above spec. sheet features our standard products. For further options please contact your local Miba Resistors representative.
sales.mra@miba.com · US: sales@mibaresistors.com

Series SSP / OSP

Power- and High-Voltage Resistors with high maximum temperature operation, TC of ±50 ppm/°C

The SSP series meets the requirements of power ratings of up to 40 W while at the same time offering voltage ratings of up to 6,000 V. These Power Resistors cover a wide ohmic value range and operate at up to 275°C in axial lead construction.

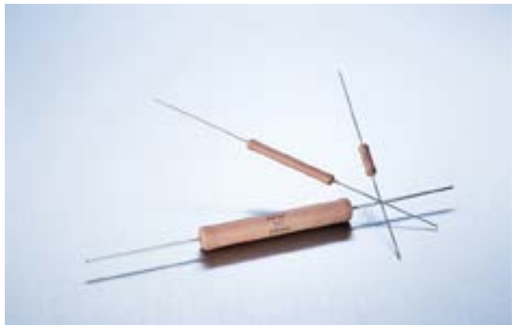

Features

- up to 40 kV operating voltage
- Non-Inductive design
- ROHS compliant
- Full power and voltage ratings (derating not required)

Technical Specifications

Resistance value	0.1 Ω ≤ 30 MΩ (see model specifications)
Resistance tolerance	±1 % to ±10 % standard ±0.1 % to ±0.5 % on special request for limited ohmic values** - "L -Version"
Temperature coefficient	≥ 10 Ω: 50 ppm/°C (referenced to 25°C, ΔR taken at -15°C and +85°C) 25 ppm/°C on special request for limited ohmic values, ask for details
Max. operating temperature	+ 275°C
Dielectric strength	1,000 V DC
Insulation resistance	10 GΩ min. at 1,000 V DC
Overload / overvoltage	5x rated power with applied voltage not to exceed 1.5x maximum continuous operating voltage for 5 sec. ΔR 0.5 % max. or 0.5 Ω max. whichever is greater (not applicable for SSP-148!)
Load Life	1,000 hours at rated power, ΔR 0.5 % max. or 0.5 Ω max., whichever is greater
Thermal shock	MIL-Std-202, method 107, Cond. C, ΔR 0.5 % max. or 0.5 Ω max., whichever is greater
Encapsulation	**standard coating: silicone conformal** we recommend 2xpolyimide coating for use in oil and potted applications (ask for details) other coatings available on special request
Lead material	OFHC copper, tin-plated
Other terminals available	screw end caps [6/32", M4 (torque max. 1 Nm), customer-specific], golden leads with diameter 0,8 mm availabe for SSP series (ask for details)
Weight	depending on model no. (ask for details)

To accomplish this objective of high stability, high value, high voltage and high power in the SSP series, Miba Resistors employs a special variation of its METOXFILM formulations. These films are annealed on special ceramic bodies at temperatures above 1,400°F/800°C and become an inherent part of the ceramic surface, which brings about their unusual performance characteristics. As a result of Miba Resistors unique Non-Inductive patented process, these resistors are ideally suited for high-frequency applications and result in less "ringing" with minimum distortion of the signals and faster settling times.

F*: enforced cooling
- Resistor in open air position, air flow >1.5 m/sec. at ≤25°C ambient temperature
- Resistor in case, air flow >2 m/sec. at ≤25°C ambient temperature

**** Version L:**
Resistance tolerances down to ±0.5 % or ±0.1 %, lower max. power (like SGP Series)

Model Specifications

Model no.	Wattage	Max. continuous operating voltage	Resistance values Min. Ω	Resistance values Max. Ω	Dimensions in millimeters (inches) A ±0.50 ±0.02	B ±0.50 ±0.02	C ±0.05 ±0.002
OSP 10	2.00	1,000	0.1	10M	10.90 (0.429)	4.20 (0.165)	0.60 (0.024)
OSP 13	2.40	1,000	0.1	12M	13.70 (0.539)	4.20 (0.165)	0.60 (0.024)
OSP 20	3.00	1,000	0.1	15M	19.70 (0.776)	4.20 (0.165)	0.60 (0.024)
SSP 20	4.00	800	0.1	15M	20.20 (0.795)	8.20 (0.323)	1.00 (0.040)
SSP 26	6.00	2.000	0.1	15M	26.90 (1.059)	8.20 (0.323)	1.00 (0.040)
SSP 32	8.00	4,500	0.1	20M	33.00 (1.3)	8.20 (0.323)	1.00 (0.040)
SSP 32 F*	10.00	4,500	1	10M	33.00 (1.3)	8.20 (0.323)	1.00 (0.040)
SSP 39	10.00	4,500	0.1	20M	39.50 (1.555)	8.20 (0.323)	1.00 (0.040)
SSP 52	12.50	6,000	0.1	30M	52.10 (2.051)	8.20 (0.323)	1.00 (0.040)
SSP 52 F*	15.00	6,000	1	30M	52.10 (2.051)	8.20 (0.323)	1.00 (0.040)
SSP 148	40.00	6,000	1	100K	148.00 (5.83)	16.00 (0.63)	M4

The above spec. sheet features our standard products. For further options please contact your local Miba Resistors representative

sales.mra@miba.com · US: sales@mibaresistors.com

Series SSP / OSP

OSP series overview

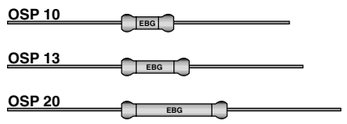

SSP series overview

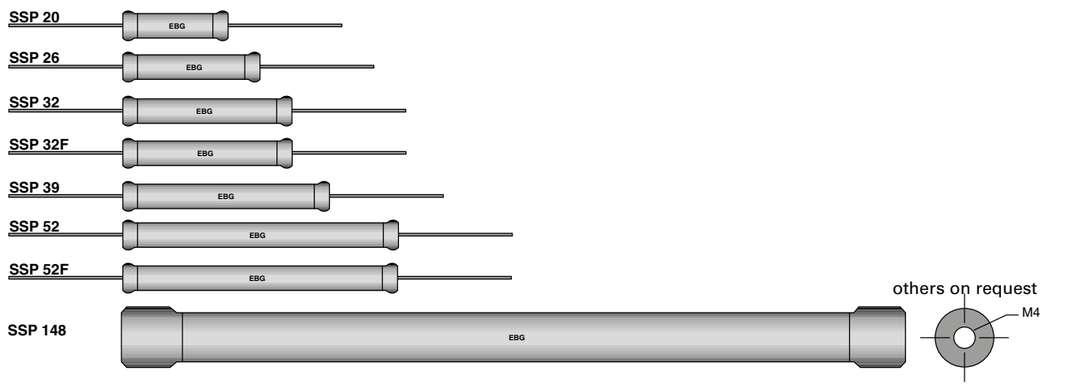

How to make a request

Model no._Ohmic Value_Tolerance_TCR

For example:
SSP-52 68R 5% 50ppm or OSP-10 150K 10% 50ppm

Example for low tolerance
SSP-32-L 10R04 0.1% 50ppm

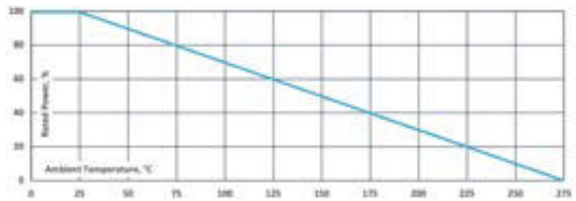

Dimensions in mm [inches]

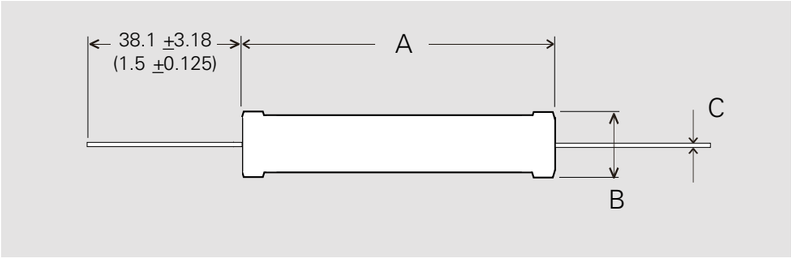

The above spec. sheet features our standard products. For further options please contact your local Miba Resistors representative.

sales.mra@miba.com · US: sales@mibaresistors.com

Series SSP / OSP

Pulse Energy Curve (typical rating for SSP series)

Note: These energy values are reference values → depending on ohmic value e.g. 1 Ω to 10 Ω and used resistive paste, a variation in max. energy load capability is possible

Test procedure

Every test resistor was mounted with brackets in free air at +25°C ambient temperature

- The test time of each tested resistor: 10min.
- Break time between two pulses: 1sec.
- To determine good / defect parts the ohmic value was measured before and after tests: a change of tolerance of more than 0.1% means defect

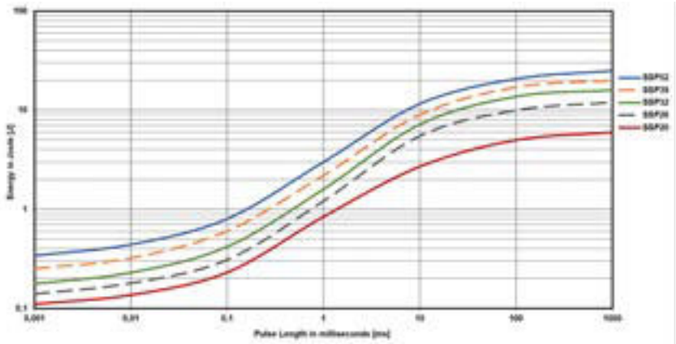

Description of Pulse Energy Curve

- Shape of pulse = e-function
- Time between two pulses = 1 second
- Pulse length = time constant of 1 tau (1 means ... tau = 1ms)

Example

At 1 ms tau the SSP-52 with e.g. 1 Ω to 10 Ω can withstand an energy level of about 3 J, when the pulse pause time is ≥ 1s

Pulse Power Curve (typical rating for SSP series)

The power curve shows the max. possible power which can be applied for a certain duration.
Referring to the same test procedure as described above.

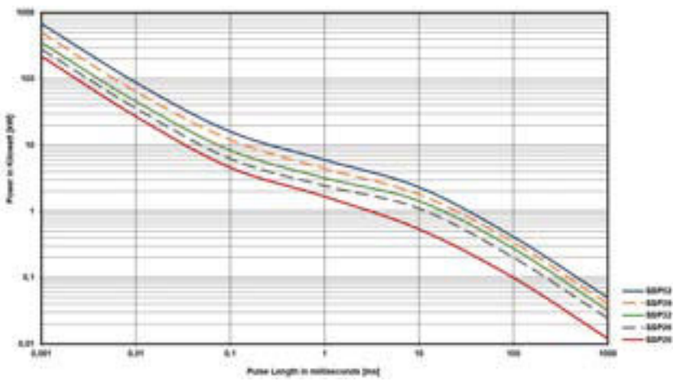

Description of Pulse Power Curve

- Shape of pulse = e-function
- Time between two pulses = 1 second
- Pulse length = time constant of 1 tau (1 means ... tau = 1ms)

Example

For SSP-52 the time-constant of 1 ms you can apply about 6 kW max., if the time between two such peaks is ≥ 1s

The above spec. sheet features our standard products. For further options please contact your local Miba Resistors representative

sales.mra@miba.com · US: sales@mibaresistors.com

Series OSX / SSX / SOX

Power- and Precision High-Voltage Resistors TC of ±100 ppm/°C and wide ohmic range

The OSX/SSX/SOX series meets a general set of requirements. The products are available with a silicone or epoxy coating and feature a wide range of tolerances and temperature coefficients.

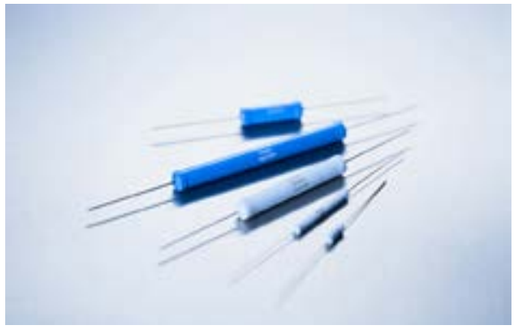

Features

- up to 60 kV operating voltage
- Non-Inductive design
- ROHS compliant
- Full encapsulation over the entire resistor length
- **All SSX types are available with M4 or 6/32 screw end caps**

Technical Specifications

Resistance value	100 Ω ≤ 50 GΩ (see model specifications) higher values on special request
Resistance tolerance	±1 % to ±10 % standard ±0.1 % to ±0.5 % on special request for limited ohmic values*
Temperature coefficient	100 ppm/°C standard (+85°C ref. to +25°C) down to ±5 ppm/°C on special request for limited ohmic values and tolerances
Max. working voltage	see model specifications
Power Rating	up to 19.40 W (see model specifications)
Dielectric strength	≤ 10 kV DC based on the coating
Overload / overvoltage	5x rated power at 70°C (referenced to specified power at +70°C) with applied voltage not to exceed 1.5x maximum continuous operating voltage for 5 sec. ΔR 0.5 % max.
Load life stability	1,000 hours at rated power at 70°C, ΔR 0.20 % max.
Moisture resistance	MIL-Std-202, method 106, ΔR 0.4 % max.
Thermal shock	MIL-Std-202, method 107, Cond. A, ΔR 0.20 % max.
Encapsulation	**silicone or epoxy coating** standard coatings: silicone or epoxy coating we recommend 2xpolyimide coating for use in oil and potted applications (ask for details)
Other terminals avaiblabe	screw end caps (6/32", M4, custom), golden leads with diameter 0,8 mm availabe for SSX / SOX series (ask for details)
Lead material	OFHC copper, tin-plated
Weight	depending on model no. (ask for details)

* In case of very tight tolerances (±0.1 % to ±0.5 %) we suggest not to use the full power rating, but rather the next larger size to achieve ultimate stability (contact us for details)

Different coatings available:

- **Silicone coating** for ambient temperatures up to 225°C
- **Epoxy coating** for excellent humidity protection available under the model no. SOX
- **Polyimide** for excellent protection for use in oil and potted applications but with reduced dielectric strength

How to make a request

Model no._Ohmic Value_Tolerance_TCR

For example:
OSX-39 100M 0.5% 100ppm or
SSX-39 500K 10% 50ppm

Example for higher working voltage:
SOX-78-S 500M 0.5% 25ppm

Dimensions in mm [inches]

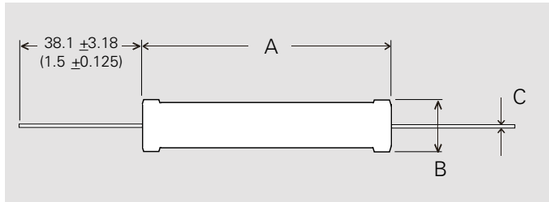

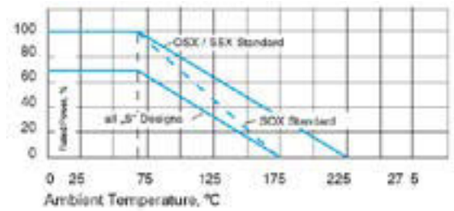

The above spec. sheet features our standard products. For further options please contact your local Miba Resistors representative.

sales.mra@miba.com · US: sales@mibaresistors.com

Series OSX / SSX / SOX

Model Specifications

Model no.	Wattage at 70°C	Max. kV	Max. kV "S" **	Resistance values Min. Ω	Resistance values Max. Ω	Dimensions in millimeters (inches) A ±0.50 ±0.02	B ±0.50 ±0.02	C ±0.05 ±0.002
OSX-10	0.80	1.5	1.9	100	1 G	10.80 (0.425)	4.00 (0.157)	0.60 (0.024)
OSX-13	1.00	1.5	1.9	100	5 G	13.40 (0.528)	4.00 (0.157))	0.60 (0.024)
OSX-20	1.50	3.0	3.7	100	10 G	19.70 (0.776)	4.00 (0.157)	0.60 (0.024)
OSX-26	1.95	4.0	5.0	100	10 G	26.00 (1.024)	4.00 (0.157)	0.60 (0.024)
OSX-30	2.30	6.0	7.5	100	10 G	32.40 (1.276)	4.00 (0.157)	0.60 (0.024)
OSX-39	3.10	6.0	7.5	100	10 G	39.40 (1.551)	4.00 (0.157)	0.60 (0.024)
SOX-20	1.20	5.0	6.2	300	10 G	21.30 (0.839)	8.60 (0.339)	1.00 (0.040)
SOX-26	1.60	7.5	9.4	450	10 G	27.50 (1.083)	8.60 (0.339)	1.00 (0.040)
SOX-39	2.50	11.0	13.8	500	10 G	40.20 (1.583)	8.60 (0.339)	1.00 (0.040)
SOX-52	3.40	16.0	20.0	400	10 G	52.50 (2.067)	8.60 (0.339)	1.00 (0.040)
SOX-78	5.00	24.0	30.0	600	10 G	78.70 (3.098)	8.60 (0.339)	1.00 (0.040)
SOX-103	6.50	32.0	40.0	800	10 G	104.10 (4.098)	8.60 (0.339)	1.00 (0.040)
SOX-124	8.20	40.0	50.0	1 M	10 G	124.20 (4.890)	8.60 (0.339)	1.00 (0.040)
SOX-154	10.60	48.0	60.0	1 M	10 G	154.50 (6.083)	8.60 (0.339)	1.00 (0.040)
SSX-20	2.30	5.0	6.2	600	10 G	20.20 (0.795)	8.20 (0.323)	1.00 (0.040)
SSX-26	3.90	7.5	9.4	600	10 G	27.20 (1.071)	8.20 (0.323)	1.00 (0.040)
SSX-32	4.20	8.5	11.0	550	10 G	33.00 (1.299)	8.20 (0.323)	1.00 (0.040)
SSX-39	4.60	11.0	13.8	500	25 G***	39.50 (1.555)	8.20 (0.323)	1.00 (0.040)
SSX-52	7.80	16.0	20.0	400	25 G***	52.00 (2.047)	8.20 (0.323)	1.00 (0.040)
SSX-78	11.70	24.0	30.0	600	50 G***	77.60 (3.055)	8.20 (0.323)	1.00 (0.040)
SSX-103	12.50	32.0	40.0	800	50 G***	103.20 (4.063)	8.20 (0.323)	1.00 (0.040)
SSX-124	15.50	40.0	50.0	1 M	50 G***	123.70 (4.870)	8.20 (0.323)	1.00 (0.040)
SSX-154	19.40	48.0	60.0	1 M	50 G***	153.70 (6.051)	8.20 (0.323)	1.00 (0.040)

** Our resistors are designed for operation in air and nonaggressive atmosphere. For special applications like oil, casting, molding, SF6, etc., please contact us.

*** higher ohmic values on special request (ask for details)

SOX series overview

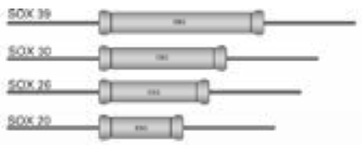

SSX series overview

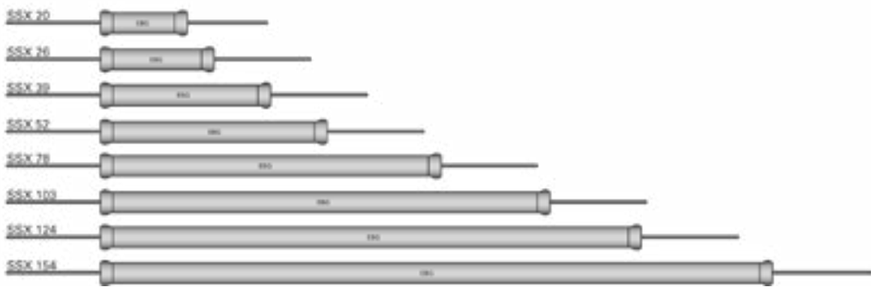

The above spec. sheet features our standard products. For further options please contact your local Miba Resistors representative
sales.mra@miba.com · US: sales@mibaresistors.com

Series PHV

Surge test up to 325 kV (1.2/50 µs) under potting surrounding

Features

- up to 60 kV operating voltage
- Non-Inductive design
- ROHS compliant

Technical Specifications

Resistance value	500 Ω ≤ 1 GΩ (other values on special request)
Resistance tolerance	±1 % to ±10 %
Temperature coefficient	±100 ppm/°C from +25°C to +85°C (down to ±15ppm possible, ask for details))
Maximum working voltage	60 kV DC
Dielectric strength	≤ 10 kV DC based on the coating
Insulation resistance	10 GΩ min. at 1,000 V DC
Power rating	see model specifications below
Load life	1,000 hours at rated power at 70°C, ΔR 0.20 % max.
Load life stability	0.20 % per 1,000 hours at 70°C
Moisture resistance	MIL-Std-202, method 106, ΔR 0.4 % max.
Thermal shock	MIL-Std-202, method 107, Cond. A, ΔR 0.20 % max.
Encapsulation	2xpolyimide coating for use in oil and potted applications (other coating options available. ask for details)
Lead material	OFHC copper, tin-plated
Other terminals available	screw end caps (6/32", M4, custom), golden leads with diameter 0,8 mm available
Weight	depending on model no. (ask for details)

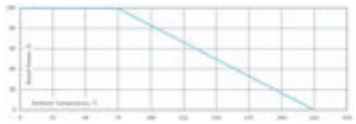

How to make a request

Model no._Ohmic value_Tolerance_TCR

For example:
PHV-52 150M 10% 100ppm

Model Specifications

Model no.	Wattage	Max. kV	Resistance values Min. Ω	Resistance values Max. Ω	Dimensions in millimeters (inches) A ±0.50 ±0.02	B ±0.50 ±0.02	C ±0.05 ±0.002
PHV-39	5.2	12.80	500 Ω	1 G	39.50 (1.555)	8.20 (0.323)	1.00 (0.040)
PHV-52	7.2	16	500 Ω	1 G	52.10 (2.051)	8.20 (0.323)	1.00 (0.040)
PHV-78	11	24	500 Ω	1 G	77.70 (3.059)	8.20 (0.323)	1.00 (0.040)
PHV-103	12	32	500 Ω	1 G	102.90 (4.051)	8.20 (0.323)	1.00 (0.040)
PHV-200	25	60	500 Ω	1 G	192.00 (7.559)	8.20 (0.323)	1.00 (0.040)

Dimensions in mm [inches]

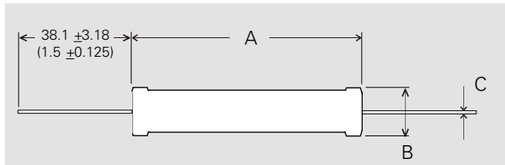

The above spec. sheet features our standard products. For further options please contact your local Miba Resistors representative.
sales.mra@miba.com · US: sales@mibaresistors.com

Precision High-Voltage Resistors

Series MTX 968

Ohmic range (400 Ω - 30 GΩ), up to 54 kV operating voltage

The MTX 968 resistor series is designed for use in voltage dividers, medical equipment, electrostatic devices, measuring equipment and current limiting devices where high stability, low TCR, high ohmic values and high short-term loads are required.

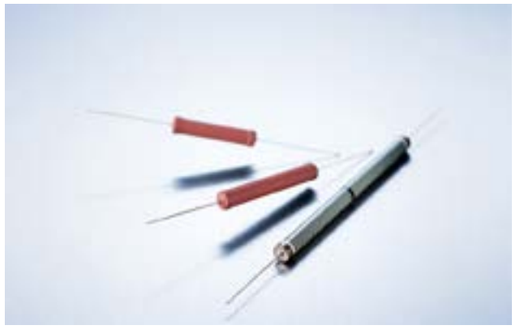

Features

- up to 54 kV operating voltage
- Tolerance range ±0.1% to ±10 %
- Ohmic range 400 Ω to 30 GΩ
- Non-Inductive design
- ROHS compliant

Technical Specifications

Resistance value	400 Ω ≤ 30 GΩ (see model specifications)
Resistance tolerance	±0.1 % to ±10 %
Temperature coefficient	±15 ppm/°C to ±200 ppm/°C (at +85°C ref. to + 25°C) lower TCR on special request for limited ohmic values
Max. Operating temperature	-55°C to +225°C
Dielectric strength	> 1,000 V (25°C, 75% relative humidity)
Load life	ΔR/R 0.5% max., 1,000 hours at rated power
Moisture resistance	ΔR/R 0.25% max.
Thermal shock	ΔR/R 0.25% max.
Encapsulation	**standard coating: silicone conformal (A)** we recommend 2xpolyimide coating (P) for use in oil and potted applications (ask for details) other coatings available on special request
Lead material	copper wire, gold-plated
Weight	depending on model no. (ask for details)

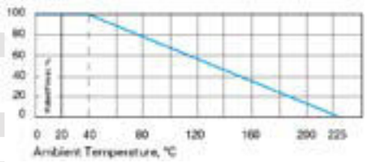

How to make a request

Model no._Ohmic Value_Tolerance_TCR

For example:
MTX 968.3 36M 10% 100ppm

Example for optional coating:
MTX 969.15 100M 1% 100ppm 2xpolyimide coating

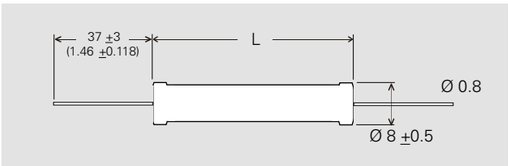

Model Specifications

Model no.	P Wattage 40 °C	V KVdc A in air	V KVdc P in air	V KVdc P in oil	Resistance values: Tolerance **1 – 10%** TC ppm / °C **200**	Tolerance **0.5 – 10%** TC ppm / °C **100**	Tolerance **0.25 – 10%** TC ppm / °C **50**	Tolerance **0.1 – 10%** TC ppm / °C **25, 15**	L in mm
968.2	3.8	9	5.4	2 to 5 times voltage (A), depending on quality of isolation oil	400 R – 10 G	400 R – 1 G	400 R – 1 G	60 K – 500 M	27 ± 1
968.3	5	12	7.2		500 R – 15 G	500 R – 1.5 G	500 R – 1.5 G	80 K – 750 M	37 ± 1
968.5	7.5	18	11		900 R – 20 G	900 R – 2 G	900 R – 2 G	120 K – 1 G	52 ± 1
968.7	10	24	14.4		1.2 K – 30 G	1.2 K – 3 G	1.2 K – 3 G	180 K – 1.5 G	78 ± 1.5
968.10	12.5	36	21.6		1.7 K – 30 G	1.7 K – 4 G	1.7 K – 3 G	240 K – 2 G	103 ± 1.5
968.12	15	42	25.2		2.6 K – 30 G	2.6 K – 5 G	2.6 K – 3 G	300 K – 2 G	128 ± 2
968.15	17	54	32.4		3.2 K – 30 G	3.2 K – 6 G	3.2 K – 3 G	350 K – 2 G	153 ± 2

Our resistors are designed for operating in air and non-aggressive atmospheres.
For special applications (i.e. oil, casting, molding, SF6, etc.), please contact our local EBG representative or contact us directly.

The above spec. sheet features our standard products. For further options please contact your local Miba Resistors representative

sales.mra@miba.com · US: sales@mibaresistors.com

Precision High-Voltage / High Power Resistors

Series MTX 969

Up to 96 kV and 105 W

The MTX 969 resistor series is designed for use in voltage dividers, medical equipment, electrostatic devices, measuring equipment and current limiting devices where high stability, low TCR, high ohmic values and high short-term loads are required.

Features

- up to 96 kV operating voltage
- Tolerance range ±0.1% to ±10 %
- Ohmic range 2 Ω to 25 GΩ
- Non-Inductive design
- ROHS compliant

Technical Specifications

Resistance value	2 Ω ≤ 25 GΩ (see model specifications)
Resistance tolerance	±0.1 % to ±10 %
Temperature coefficient	±10 ppm/°C to ±200 ppm/°C (at +85°C ref. to + 25°C) lower TCR on special request for limited ohmic values
Max. Operating temperature	-55°C to +225°C
Dielectric strength	> 1,000 V (25°C, 75% relative humidity)
Load life	ΔR/R 0.5% max., 1,000 hours at rated power
Moisture resistance	ΔR/R 0.25% max.
Thermal shock	ΔR/R 0.25% max.
Encapsulation	**standard coating: silicone conformal** we recommend 2xpolyimide coating for use in oil and potted applications (ask for details) other coatings available on special request
Lead material	caps, nickel-plated
Torque	1.8 Nm to 2 Nm for M4, 3.8 Nm to 4 Nm for M8
Weight	depending on model no. (ask for details)

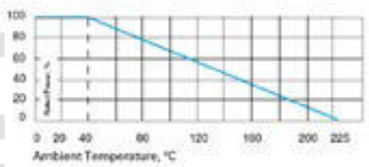

How to make a request

Model no._Ohmic Value_Tolerance_TCR

For example:
MTX 969.105 12M 10% 100ppm

Example for optional coating
MTX 969.71 100M 0.1% 100ppm 2xpolyimide coating

Model Specifications

Model no.	P Wattage 40 °C	V Voltage kV DC	Resistance values: Tolerance **2 % – 10%** TC ppm / °C **150, 200**	Tolerance **0.5 – 10%** TC ppm / °C **50, 100**	Tolerance **0.1 – 10%** TC ppm / °C **15, 25**
969.11	11	24	500 R – 5 G	500 R – 1 G	50 K – 500 M
969.23	23	48	700 R – 10 G	700 R – 10 G	100 K – 1 G
969.54	54	48	2 R – 10 G	2 R – 1 G	100 K – 1 G
969.71	71	64	20 R – 15 G	20 R – 1.5 G	100 K – 1.5 G
969.105	105	96	80 R – 25 G	80 R – 2 G	100 K – 2 G

Model no.	L	B	Ø	D	G
969.11	81 ± 1	14.5 ± 0.2	13.5 ± 0.5	10 ± 0.2	M4
969.23	156 ± 2	14.5 ± 0.2	13.5 ± 0.5	10 ± 0.2	M4
969.54	160 ± 2	31.5 ± 0.2	30.5 ± 0.5	18 ± 0.2	M8
969.71	210 ± 2.5	31.5 ± 0.2	30.5 ± 0.5	18 ± 0.2	M8
969.105	308 ± 3.5	31.5 ± 0.2	30.5 ± 0.5	18 ± 0.2	M8

Dimensions in mm

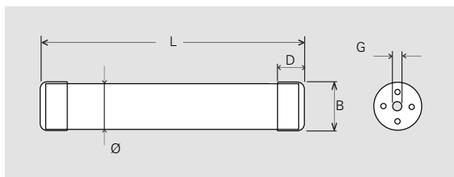

The above spec. sheet features our standard products. For further options please contact your local Miba Resistors representative.

sales.mra@miba.com · US: sales@mibaresistors.com

High-Power Water-Cooled Resistors

Series MTX 969 W

High-Power Water-Cooled Single Resistors and Voltage Dividers up to 1,700 W

1/1

Our resistor series 969 W is designed for use in high-power applications. Direct water cooling renders these resistors suitable for a very high continuous power load.

Easy M4 mounting, wide ohmic range, precise tolerance and temperature coefficient values as well as high dielectric strength capability are only some of the features of this resistor series. There is also an option for voltage dividers!

Features

- up to 1,700 W operating power
- Non-Inductive design
- ROHS compliant

Technical Specifications

Resistance value	0.5 Ω ≤ 10 MΩ
Resistance tolerance	±5 % to ±10 % standard
Temperature coefficient	> 10 Ω: ±100 ppm/°C standard ≤ 10 Ω: +250 ppm/°C (at +85°C ref. to +25°C) lower TCR on special request for limited ohmic values
Inductivity	80 – 100 nH typical measuring frequency 10 kHz
Isolation voltage	10 kV DC (between Contact 1 and Isolation Contact) – for 969 W and 969 W-L 3 kV DC for 969 W-S
Connecting type of cooling medium	6 mm – tube (other connections on special request)
Max. cooling medium pressure	10 bar
Contact material	CrNi (stainless)
Weight	depending on model no. (ask for details)

How to make a request

Model no._Ohmic Value_Tolerance

For example:
MTX 969 W 75R 10% or MTX 969 W-L 2M4 5%

Model Specifications / Dimensions in mm

Model no.	Wattage max.	Voltage max.	L	L1	L2
969 W-S	500	5 kV DC	117	100	5
969 W	1000	7 kV DC	195	178	15
969 W-L	1700	10 kV DC	337	320	15

(max. Power at cooling medium temp. < 50°C, flow > 7 l / min.)
If (power-) resistors are used in an enforced cooling application, coolant flow may not be interrupted!

Tolerances acc. DIN ISO 2768 (rough)

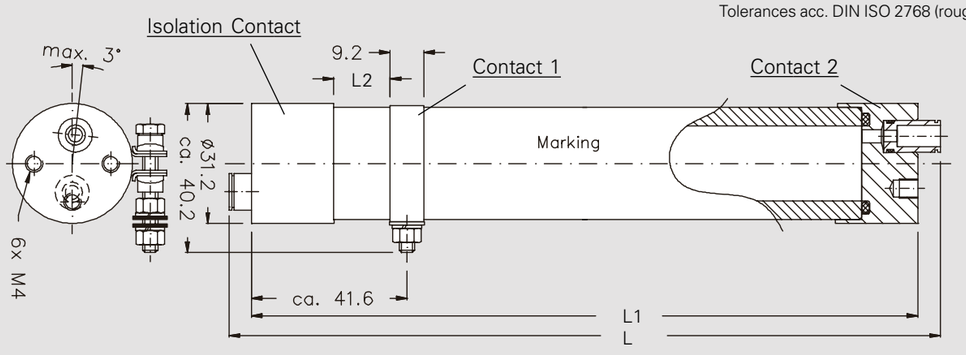

The above spec. sheet features our standard products. For further options please contact your local Miba Resistors representative
sales.mra@miba.com · US: sales@mibaresistors.com

High-Voltage Flat Style Resistors

Series MTX 967

TC of ±10 ppm/°C to ±200 ppm/°C, different coatings available

1/1

Good temperature and voltage coefficients, high resistance values and high voltage capability.

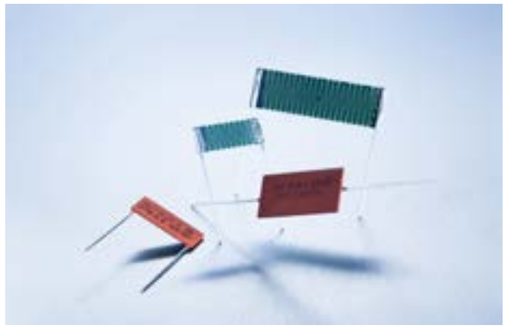

Features

- up to 35 kV operating voltage
- Tolerance range ±10 % to ±0.1 %
- Ohmic range 10 Ω to 30 GΩ (depending on model no.)
- Non-Inductive design
- ROHS compliant

Technical Specifications

Resistance value	10 Ω ≤ 30 GΩ (depeding on model no., ask for details)
Resistance tolerance	±0.1 % to ±10 %
Temperature coefficient	±15 ppm/°C to ±200 ppm/°C (at 85°C ref. to +25°C) other TCR on special request for limited ohmic values
Max. operating temperature	-55 to +175°C
Dielectric strength	> 1,000 V (25°C, 75% relative humidity)
Insulation resistance	> 10,000 M (500 V, 25°C, 75% relative humidity)
Overload	ΔR/R 0.25 % max. 1.5x Pnom, 5 sec. (do not exceed 1.5x V max.)
Load Life	ΔR/R 0.25 % max.
Moisture resistance	ΔR/R 0.25 % max.
Thermal shock	ΔR/R 0.2 % max.
Encapsulation	**silicone conformal (U) or glass coating (G)** other coatings with different dielectric strengths available on special request
Lead material	tinned copper
Weight	depending on model no. (ask for details)

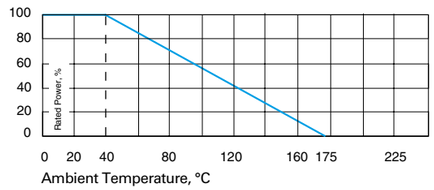

How to make a request

Model no. A or R_U or G_Ohmic Value_ Tolerance_TCR

A = Axial
R = Radial

U = Silicone conformal coating
G = Glass coating

For example:
MTX 967.3.25 RG 56M 5% 100ppm or
MTX 967.15.15 AU 1G 1% 100ppm

Model Specifications / Dimensions in mm

Model no.	P Wattage	V kV DC	A (± 1)	B (± 1)	C
967.3.25	1	8	25.4	3.8	22.9
967.3.38	1.5	10	38	3.8	35.7
967.5.13*	1	5	12.7	5.0	10.2
967.5.51	2	20	50.8	5.0	48.3
967.10.25	2	10	25.4	10.0	22.9
967.10.51	3	30	50.8	10.0	48.3
967.15.38	3	15	38	15.0	35.7
967.15.51	4.5	30	50.8	15.0	48.3
967.15.76	5.5	35	76.2	15.0	73.4
967.25.99	10	35	101.6	24.0	98.6

*Pins: L = 9 + 1 mm ⏥ 0.6 x 0.35 mm

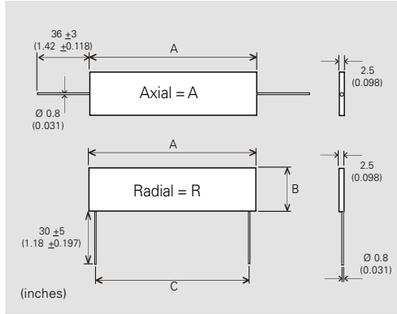

The above spec. sheet features our standard products. For further options please contact your local Miba Resistors representative.
sales.mra@miba.com · US: sales@mibaresistors.com

Series FBX / FSX

TC of ±80 ppm/°C combined with precision tolerances and wide ohmic range

Low-cost, high-voltage resistors that provide high-density packaging in large volume applictions.

Features

- up to 29 kV operating voltage
- Non-Inductive design
- ROHS compliant
- Standard contact lead diameter 0.6 mm. Others available on special request or no lead version for SMD mounting
- On request custom designed version available, max. ceramic size substrates 101.6 mm (4 inch)
- **Voltages up to 35% higher than the values listed – "S"-Version**

Technical Specifications

Resistance value	200 Ω ≤ 2 GΩ higher values on special request
Resistance tolerance	±0.5 % to ±10 % down to ±0.1 % on special request for limited ohmic values
Temperature coefficient	≤ 100 MΩ: ±80 ppm/°C standard > 100 MΩ: ±150 ppm/°C standard from -5°C to +105°C referenced to +25°C; down to 15ppm/°C on special request for limited ohmic value
Max. operating temperature	FBX/FSX: -55°C to +225°C
Voltage coefficient	see VCR-chart below, for FBX-6/5 ask for details
Weight	depending on model no. (ask for details)

Different coatings available:

- **Series FBX:** with surface silicone print as an inexpensive alternative
- **Series FSX:** silicone conformal for high-tempearture operations (225°C)

Other coating options such as glass, 2xpolyimide, UV cured, on special request

Model Specifications

Series FBX with Surface Silicone Print

Model no.	Wattage at +25°C	Max. continuous operating voltage	Dimensions in millimeters (inches)		
			A ±0.50 (max.) ±0.02	**B** ±0.50 (max.) ±0.02	**C** ±0.50 ±0.02
FBX 1/2	0.50	3,000*	12.90 (0.51)	3.40 (0.13)	10.20 (0.40)
FBX 5/5	0.65	4,500*	17.15 (0.68)	3.40 (0.13)	15.24 (0.60)
FBX 6/5	1.20	5,000*	20.00 (0.98)	5.08 (0.20)	17.78 (0.70)
FBX 8/5	1.60	6,000*	25.60 (1.01)	5.30 (0.21)	22.90 (0.90)
FBX 3	3.00	9,000*	38.30 (1.51)	6.60 (0.26)	35.50 (1.40)
FBX 4	4.00	11,500*	51.00 (2.01)	6.60 (0.26)	48.20 (1.90)
FBX 2/2	5.00	16,500*	51.00 (2.01)	12.90 (0.51)	48.20 (1.90)

*when used in clean air

Series FSX with Conformal Silicone Protection

Model no.	Wattage at +25°C	Max. continuous operating voltage	Dimensions in millimeters (inches)		
			A ±1.00 (max.) ±0.04	**B** ±1.00 (max.) ±0.04	**C** ±0.50 ±0.02
FSX 1/2	0.50	4,000	13.60 (0.54)	4.50 (0.18)	10.20 (0.40)
FSX 5/5	0.65	6,000	17.85 (0.70)	4.50 (0.18)	15.24 (0.60)
FSX 8/5	1.60	8,000	25.90 (1.02)	6.30 (0.25)	22.90 (0.90)
FSX 3	3.00	12,000	38.70 (1.52)	7.50 (0.30)	35.50 (1.40)
FSX 4	4.00	15,000	51.30 (2.02)	7.50 (0.30)	48.20 (1.90)
FSX 2/2	5.00	22,000	51.30 (2.02)	14.20 (0.56)	48.20 (1.90)

The above spec. sheet features our standard products. For further options please contact your local Miba Resistors representative

sales.mra@miba.com · US: sales@mibaresistors.com

Series FBX / FSX

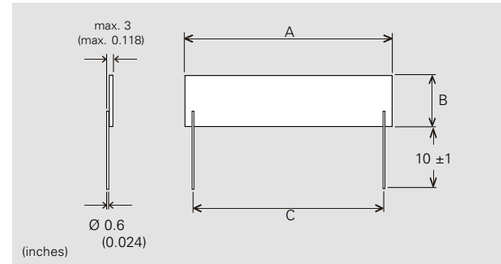

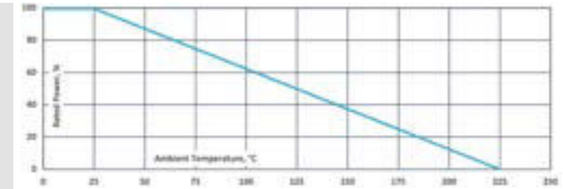

How to make a request

Model no._Ohmic value_Tolerance_TCR

For example:
FBX-4 300K 1% 80ppm or FSX-8/5 10M 1% 25ppm

Example for higher voltage:
FSX-8/5-S 33M 1% 50ppm

Typical Voltage Coefficient for FBX series (in ppm per volt)

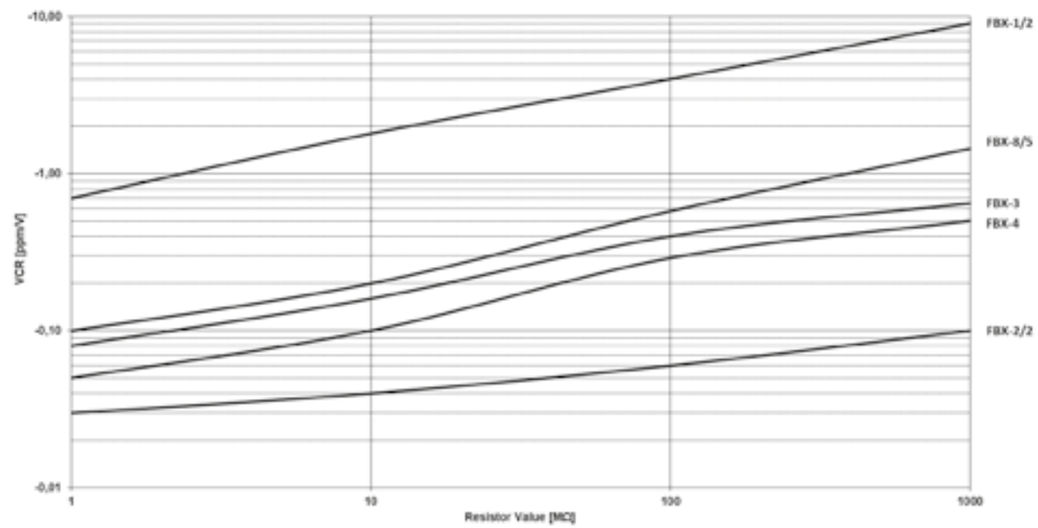

Example:
FBX-2/2 with 100 MΩ has a typical voltage coefficient of -0.06 ppm/V.

The above spec. sheet features our standard products. For further options please contact your local Miba Resistors representative.

sales.mra@miba.com · US: sales@mibaresistors.com

High-Voltage Flat Style Resistors

Series FPX / FLX

TC of ±100 ppm/°C combined with precision tolerance and wide ohmic range

Low-cost power resistors that provide high-density packaging in large volume applications.

Features

- up to 22 kV operating voltage
- Series FPX / FLX printed silicone surface protection or conformal silicone coating for high-temperature operation (225°C)
- Thickness max. 3 mm (0.118 inch) for high-density packaging
- Non-Inductive design
- ROHS compliant
- **Voltages up to 35% higher than listed = "S"-Version**

Technical Specifications

Resistance value	**FPX:** 200 Ω ≤ 2 GΩ **FLX:** 10 Ω ≤ 1 GΩ
Resistance tolerance	**FPX:** ±1 % to ±10 % **FLX:** ±0.5 % to ±10 %
Temperature coefficient	±100 ppm/°C, measured from +25°C to 85°C on special request down to ±15 ppm for specific sizes & ohmic value
Max. operating temperature	-55°C to +225°C
Voltage coefficient (typically)	Resistance range - ppm/V 200 R – 1 M: 0.1 - 1.0 1 M – 100 M: 0.2 - 3.0 100 M – 2.000 M: 0.5 - 10.0
Weight	depending on model no. (ask for details)

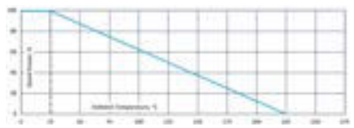

Model Specifications

Series FPX with Surface Silicone Print

Model no.	Wattage	Max. continuous operating voltage	Dimensions in millimeters (inches)		
			A (max.) ±0.50 ±0.02	B (max.) ±0.50 ±0.02	C ±0.50 ±0.02
FPX 1/2	1.50	3,000*	12.90 (0.51)	3.40 (0.13)	10.20 (0.40)
FPX 8/5	2.50	6,000*	25.60 (1.01)	5.30 (0.21)	22.90 (0.90)
FPX 3	4.00	9,000*	38.30 (1.51)	6.60 (0.26)	35.50 (1.40)
FPX 4	5.00	11,500*	51.00 (2.01)	6.60 (0.26)	48.20 (1.90)
FPX 2/2	7.50	16,500*	51.00 (2.01)	12.90 (0.51)	48.20 (1.90)

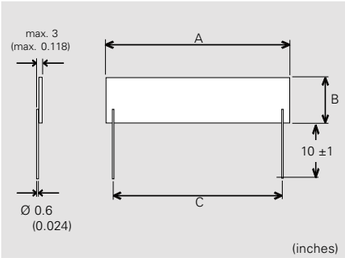

*when used in clean air

Series FLX with Conformal Silicone Protection

FLX 1/2	1.50	300	12.90 (0.51)	3.40 (0.13)	10.20 (0.40)
FLX 8/5	2.50	500	25.60 (1.01)	5.30 (0.21)	22.90 (0.90)
FLX 3	4.00	800	38.30 (1.51)	6.60 (0.26)	35.50 (1.40)
FLX 4	5.00	1,000	51.00 (2.01)	6.60 (0.26)	48.20 (1.90)
FLX 2/2	7.50	1,000	51.00 (2.01)	12.90 (0.51)	48.20 (1.90)

How to make a request

Model no._Ohmic Value_Tolerance

For example:
FPX 8/5 200M 1%

The above spec. sheet features our standard products. For further options please contact your local Miba Resistors representative

sales.mra@miba.com · US: sales@mibaresistors.com

Power Resistors

LXP-18 TO-220
LXP-20 TO-220
LXP-100 B TO-247
LXP-150 TO-247
LHP-150 TO-247
MXP 35 TO-220
MSP 35 SMD TO-220
AXP-50
AXP-100 B
AXP-150
AXS-600 / AXF-600/ AXP-600
GXP 120, SOT-227
HPP 150
VHP
HPS 150
HXP 200, SOT-227
HXP 600
PXP 200, SOT-227 (solder pin)
LPP-250
WLL-320
ACP-100
RPS-100
AXM

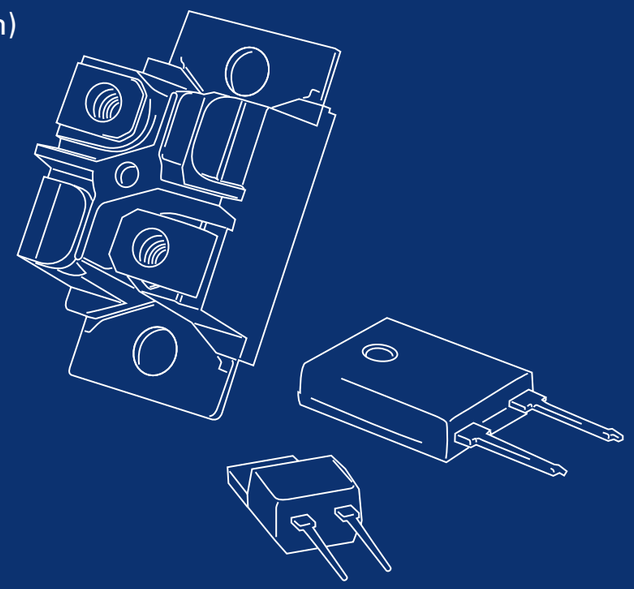

Series LXP-18 TO-220

18 W Thick Film Resistor for high-frequency and pulse-loading applications

Miba Resistors offers the completely encapsulated and insulated TO-220 package for low ohmic value and Non-Inductive design for high-frequency and pulse-loading applications. Ideal use for power supplies. The LXP-18 series is rated at 18 W mounted to a heat sink.

Features

- 18 W operating power
- **TO-220 package** configuration
- Single-screw mounting simplifies attachment to heat sink
- A fully molded housing for environmental protection
- Resistor package completely insulated from heat sink
- Non-Inductive design
- ROHS compliant
- Materials in accordance with UL 94 V-0

Technical Specifications

Resistance value	0.05 Ω ≤ 1 MΩ (higher values on special request)
Resistance tolerance	±1 % to ±10 % ±0.5 % on special request for limited ohmic values
Temperature coefficient	1 Ω < 10 Ω: ±100 ppm + 0.002 Ω/°C ≥ 10 Ω: ±50 ppm/°C (referenced to 25 °C, ΔR taken at +85°C)
Power rating	18 W at 25°C bottom case temperature depends on case temperature (see power rating curve)
Maximum operating voltage	350 V
Dielectric strength voltage	1,800 V AC
Insulation resistance	> 10 GΩ at 1,000 V DC
Momentary overload	2x rated power with applied voltage not to exceed 1.5x maximum continuous operating voltage for 5 sec. ΔR ±(0.3 % + 0.001 Ω) max.
Load life	MIL-R-39009, 2,000 hours at rated power, ΔR ±(1.0 % + 0.001 Ω) max.
Moisture resistance	MIL-STD-202, method 106 ΔR ±(0.5 % + 0.001 Ω) max.
Thermal shock	MIL-STD-202, method 107, Cond. F, ΔR ±(0.3 % + 0.001 Ω) max.
Terminal strength	MIL-STD-202, method 211, Cond. A (Pull Test) 2.4 N, ΔR ±(0.2 % + 0.001 Ω) max.
Vibration, high frequency	MIL-STD-202, method 204, Cond. D, ΔR ±(0.2 % + 0.001 Ω) max.
Lead material	tinned copper
Mounting - torque	0.7 Nm to 0.9 Nm using a screw and a compression washer mounting technique
Weight	~1,3 g

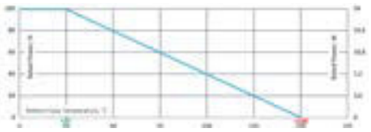

Derating (thermal resist.) LXP-18:
0.144 W/K (6.94 K/W)

Without a heat sink, when in open air at 25°C, the LXP-18 is rated for 2.25 W. Derating for temperature above 25°C is 0.018 W/K.

Case temperature must be used for definition of the applied power limit. Case temperature measurement must be done with a thermocouple contacting the center of the component mounted on the designed heat sink. Thermal grease should be applied properly.

How to make a request

LXP-18_Ohmic Value_Tolerance

For example:
LXP-18 20R 10%

Dimensions in mm [inches]

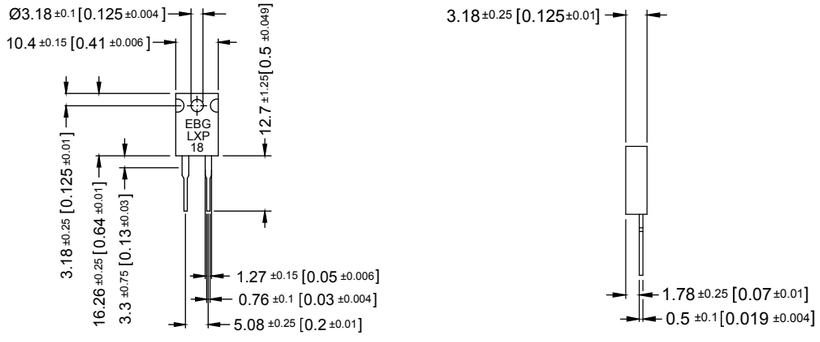

The above spec. sheet features our standard products. For further options please contact your local Miba Resistors representative

sales.mra@miba.com · US: sales@mibaresistors.com

Series LXP-18 TO-220

Pulse Energy Curve (typical rating for LXP-18)

Note: These energy values are reference values → depending on ohmic value e.g. 1 Ω to 10 Ω and used resistive paste, a variation in max. energy load capability is possible

Test procedure

Every test resistor was mounted with thermal compound (0.9 W/mK) on a water cooled heatsink

- Constant inlet water temperature: +50°C
- The test time of each tested resistor: 10min.
- Break time between two pulses: 1sec.
- To determine good / defect parts the ohmic value was measured before and after tests: a change of tolerance of more than 0.1 % means defect

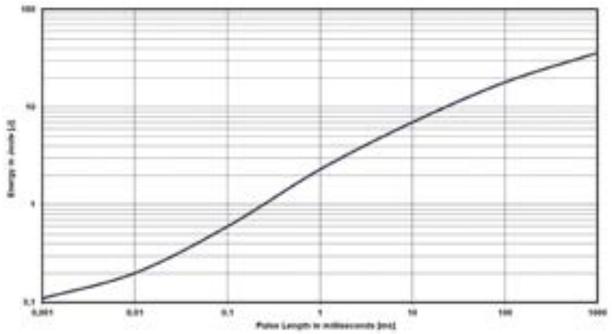

Description of Pulse Energy Curve

- Shape of pulse = e-function
- Time between two pulses = 1 second
- Pulse length = time constant of 1 tau (1 means ... tau = 1ms)

Example
At 1 ms tau the LXP-18 with e.g. 1 Ω to 10 Ω can withstand an energy level of about 2.3 J, when the pulse pause time is ≥ 1s

At a symmetrical frequency > 1 kHz at pulse length ≥ 10 µsec. the maximum applied pulse energy for LXP-18 is a result out of the nominal power 18 W divided by the operating frequency (at 25°C bottom case) (E = 18 W / F)

Pulse Power Curve (typical rating for LXP-18)

The power curve shows the max. possible power which can be applied for a certain duration.
Referring to the same test procedure as described above.

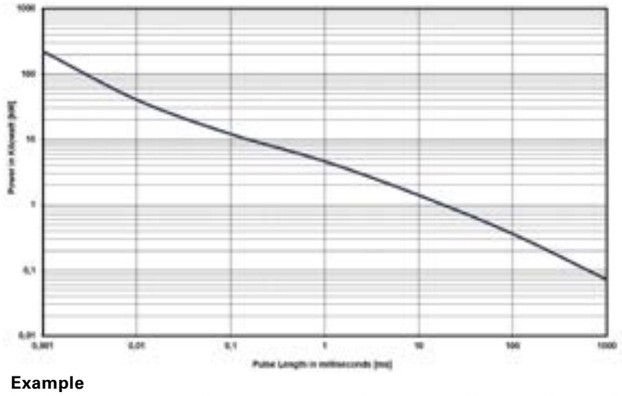

Description of Pulse Power Curve

- Shape of pulse = e-function
- Time between two pulses = 1 second
- Pulse length = time constant of 1 tau (1 means ... tau = 1ms)

Example
For the time-constant of 1 ms you can apply about 4.6 kW max. (Pp = 2*E / T)→, if the time between two such peaks is ≥ 1s

The above spec. sheet features our standard products. For further options please contact your local Miba Resistors representative.

sales.mra@miba.com · US: sales@mibaresistors.com

Series LXP-20 TO-220

20 W Thick Film Resistor for high-frequency and pulse-loading applications

Miba Resistors offers the completely encapsulated and insulated TO-220 package for low ohmic value and Non-Inductive design for high-frequency and pulse-loading applications. Ideal use for power supplies. The LXP-20 series is rated at 20 W mounted to a heat sink.

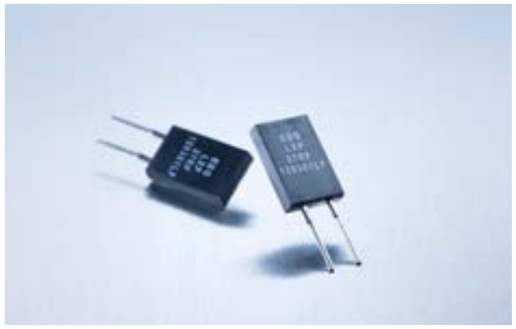

Features

- 20 W operating power
- **TO-220 package** configuration
- Snap-on style TO-220 heat sink required
- High pulse tolerant design
- A fully molded housing for environmental protection
- Resistor package completely insulated from heat sink
- Non-Inductive design
- ROHS compliant
- Materials in accordance with UL 94 V-0

Technical Specifications

Resistance value	0.05 Ω ≤ 1 MΩ (higher values on special request)
Resistance tolerance	±1 % to ±10 % ±0.5 % on special request for limited ohmic values
Temperature coefficient	1 Ω < 10 Ω: ±100 ppm + 0.002 Ω /°C ≥ 10 Ω: ±50 ppm/°C (referenced to 25°C, ΔR taken at +85°C)
Power rating	20 W at 25°C bottom case temperature depends on case temperature (see power rating curve)
Maximum operating voltage	350 V
Dielectric strength voltage	1,800 V AC
Insulation resistance	> 10 GΩ at 1,000 V DC
Momentary overload	2x rated power with applied voltage not to exceed 1.5x maximum continuous operating voltage for 5 sec. ΔR ±(0.3 % + 0.001 Ω) max.
Load life	MIL-R-39009, 2,000 hours at rated power, ΔR ±(1.0 % + 0.001 Ω)
Moisture resistance	MIL-STD-202, method 106, ΔR ±(0.5 % + 0.001 Ω) max.
Thermal shock	MIL-STD-202, method 107, Cond. F, ΔR ±(0.3 % + 0.001 Ω) max.
Terminal strength	MIL-STD-202, method 211, Cond. A (Pull Test) 2.4 N, ΔR ±(0.20 % + 0.001 Ω) max.
Vibration, high frequency	MIL-STD-202, method 204, Cond. D, ΔR ±(0.2 % + 0.001 Ω) max.
Lead material	tinned copper
Weight	~1,4 g

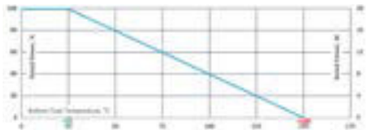

Derating (thermal resist.) LXP-20:
0.16 W/K (6.25 K/W)

Without a heat sink, when in open air at 25°C, the LXP-20 is rated for 3 W. By using the element with a snap-on heat sink, the resistor is rated for 5 W. Derating for temperature above 25°C is 0.018 W/K.

Case temperature must be used for definition of the applied power limit. Case temperature measurement must be done with a thermocouple contacting the center of the component mounted on the designed heat sink. Thermal grease should be applied properly.

How to make a request

LXP-20_Ohmic Value_Tolerance

For example:
LXP-20 20R 10%

Dimensions in mm [inches]

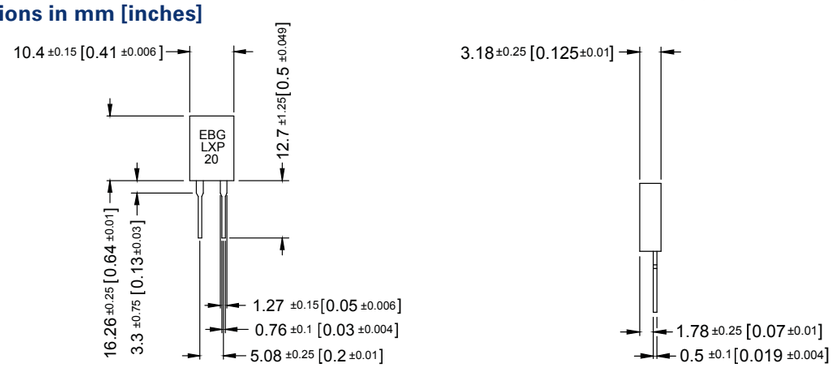

The above spec. sheet features our standard products. For further options please contact your local Miba Resistors representative

sales.mra@miba.com · US: sales@mibaresistors.com

Series LXP-20 TO-220

Pulse Energy Curve (typical rating for LXP-20)

Note: These energy values are reference values → depending on ohmic value e.g. 1 Ω to 10 Ω and used resistive paste, a variation in max. energy load capability is possible

Test procedure

Every test resistor was mounted with thermal compound (0.9 W/mK) on a water cooled heatsink

- Constant inlet water temperature: +50°C
- The test time of each tested resistor: 10min.
- Break time between two pulses: 1sec.
- To determine good / defect parts the ohmic value was measured before and after tests: a change of tolerance of more than 0.1 % means defect

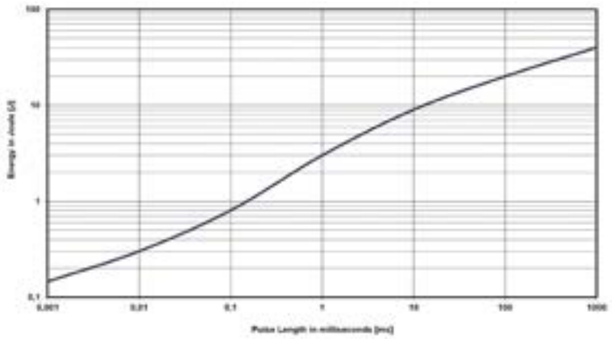

Description of Pulse Energy Curve

- Shape of pulse = e-function
- Time between two pulses = 1 second
- Pulse length = time constant of 1 tau (1 means ... tau = 1ms)

Example
At 1 ms tau the LXP-20 with e.g. 1 Ω to 10 Ω can withstand an energy level of about 3 J, when the pulse pause time is ≥ 1s

At a symmetrical frequency > 1 kHz at pulse length ≥ 10 µsec. the maximum applied pulse energy for LXP-20 is a result out of the nominal power 20 W divided by the operating frequency (at 25°C bottom case) (E = 20 W / F)

Pulse Power Curve (typical rating for LXP-20)

The power curve shows the max. possible power which can be applied for a certain duration.
Referring to the same test procedure as described above.

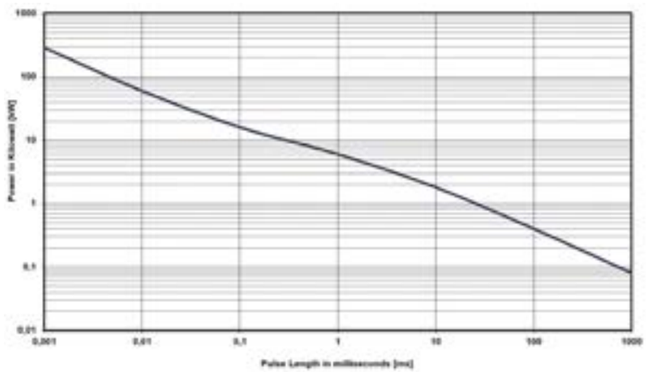

Description of Pulse Power Curve

- Shape of pulse = e-function
- Time between two pulses = 1 second
- Pulse length = time constant of 1 tau (1 means ... tau = 1ms)

Example
For the time-constant of 1 ms you can apply about 6 kW max. (Pp = 2*E / T)→, if the time between two such peaks is ≥ 1s

The above spec. sheet features our standard products. For further options please contact your local Miba Resistors representative.

sales.mra@miba.com · US: sales@mibaresistors.com

Series LXP-100 B TO-247

100 W Thick Film Resistor for high-frequency and pulse-loading applications
Version B for enforced mechanical stability

AEC-Q200 qualified

Miba Resistors offers the completely encapsulated and insulated TO-247 package for low ohmic value and Non-Inductive design for high-frequency and pulse-loading applications. Ideal use for power supplies. The LXP-100 B series is rated at 100 W mounted to a heat sink.

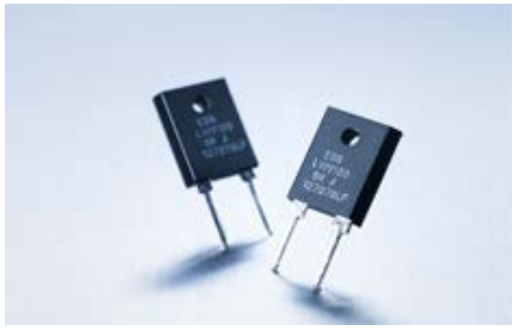

Features

- 100 W operating power
- **TO-247 package** configuration
- Single-screw mounting simplifies attachment to heat sink
- A fully molded housing for environmental protection
- Resistor package completely insulated from heat sink
- **Tube packing available (packing unit: 35 pcs. / tube)**
- For perfect heat dissipation, the use of mounting clamps is suggested (ask for details)
- Non-Inductive design
- ROHS compliant
- Materials in accordance with UL 94 V-0

Technical Specifications

Resistance value	0.05 Ω ≤ 1 MΩ (other values on special request)
Resistance tolerance	±10 % to ±1 %
Temperature coefficient	> 10 Ω: ±50 ppm/°C referenced to 25°C, ΔR taken at +105°C (other TCR on special request for limited ohmic values)
Power rating	100 W at 25°C bottom case temperature derated to 0 W at 175°C
Short time overload	1.5x rated power with applied voltage not to exceed 1.5x V max. for 5 seconds, ΔR < ±(0.50 % + 0.0005 Ω)
Maximum operating voltage	350 V, max. 500 V on special request
Insulation resistance	> 10 GΩ at 1,000 V DC
Dielectric strength voltage	1,800 V AC
Dieletric strength	MIL-STD-202, method 301 (1,800 V AC, 60 sec.) ΔR < ±(0.15 % + 0.0005 Ω)
Load life	MIL-R-39009D 4.8.13, 2,000 hours at rated power, ΔR < ±(1.0 % + 0.0005 Ω)
Moisture resistance	-10°C to +65°C, RH > 90 % cycle 240 h, ΔR < ±(0.50 % + 0.0005 Ω)
Thermal shock	MIL-STD-202, method 107, Cond. F, ΔR < ±(0.50 % + 0.0005 Ω)
Terminal strength	MIL-STD-202, method 211, Cond. A (Pull Test) 2.4 N ΔR < ±(0.20 % + 0.0005 Ω)
Vibration, high frequency	MIL-STD-202, method 204, Cond. D, ΔR < ±(0.40 % + 0.0005 Ω)
Inductance (serial)	typical 20 nH, measuring frequency 10 kHz
Lead material	tinned copper
Mounting - torque	0.7 Nm to 0.9 Nm M4 using a M3 screw and a compression wahser mounting technique
Weight	~4 g

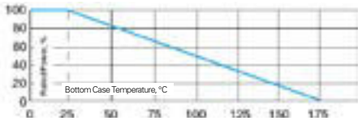

Derating (thermal resist.) LXP-100 B:
0.66 W/K (1.5 K/W)

Without a heat sink, when in open air at 25°C, the LXP-100 B is rated for 3 W. Derating for temperature above 25°C is 0.023 W/K.

Case temperature must be used for definition of the applied power limit. Case temperature measurement must be done with a thermocouple contacting the center of the component mounted on the designed heat sink. Thermal grease should be applied properly.

This value is only applicable when using thermal conduction to heat sink Rth-cs <0.025 K/W. This value can be attained by using a thermal transfer compound with a heat conductivity of 1 W/mK. The flatness of the cooling plate must be bettern than 0.05 mm overall. Surface roughness should not exceed 6.4 µm.

How to make a request

LXP-100 B_Ohmic Value_Tolerance

For example:
LXP-100 B 20R 10%

The above spec. sheet features our standard products. For further options please contact your local Miba Resistors representative
sales.mra@miba.com · US: sales@mibaresistors.com

Series LXP-100 B TO-247

AEC-Q200 qualified

Dimensions in mm [inches]

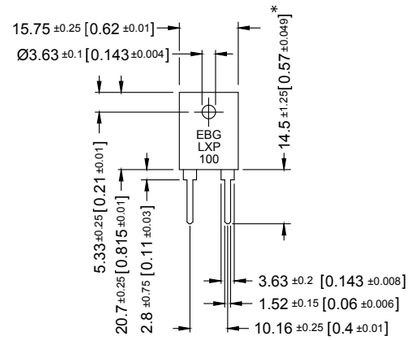

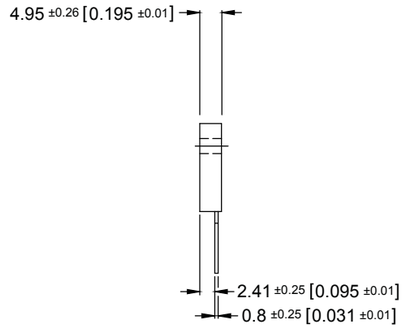

* longer contacts availabe (ask for details)

Pulse Energy Curve (typical rating for LXP-100 B)

Note: These energy values are reference values -> depending on ohmic value and used resistive paste, a variation in max. energy load capability is possible

Test procedure

Every test resistor was mounted with thermal compound (0.9 W/mK) on a water cooled heatsink

- Constant inlet water temperature: +50°C
- The test time of each tested resistor: 10min.
- Break time between two pulses: 1sec.
- To determine good / defect parts the ohmic value was measured before and after tests: a change of tolerance of more than 0.1% means defect

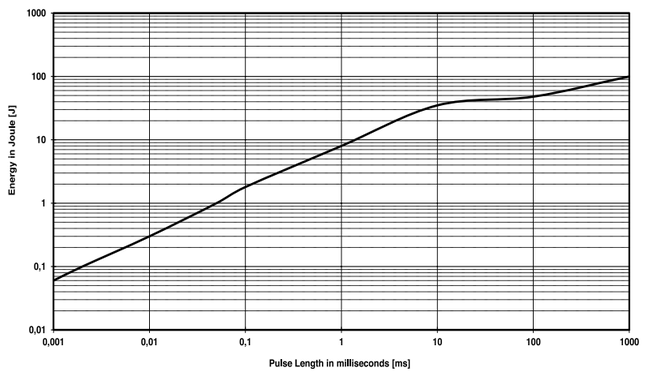

Description of Pulse Energy Curve

- Shape of pulse = e-function
- Time between two pulses = 1 second
- Pulse length = time constant of 1 tau (1 means ... tau = 1ms)

Example
At 1 ms tau the LXP-100 B can withstand an energy level of about 8 J, when the pulse pause time is ≥ 1s

At a symmetrical frequency > 1 kHz at pulse length ≥ 10 µsec. the maximum applied pulse energy for LXP-100 B is an result out of the normal power 100 W divided by the operating frequency (at 25°C bottom case) (E = 100 W / F)

The above spec. sheet features our standard products. For further options please contact your local Miba Resistors representative.
sales.mra@miba.com · US: sales@mibaresistors.com

Series LXP-100 B TO-247

AEC-Q200 qualified

Pulse Power Curve (typical rating for LXP-100 B)

The power curve shows the max. possible power which can be applied for a certain duration.
Referring to the same test procedure as described at page 30.

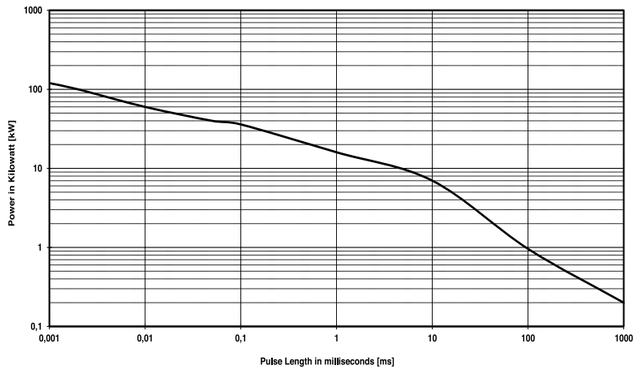

Description of Pulse Power Curve

- Shape of pulse = e-function
- Time between two pulses = 1 second
- Pulse length = time constant of 1 tau (1 means ... tau = 1ms)

Example

For the time-constant of 1 ms you can apply about 16 kW max. (Pp = 2*E / T)→, if the time between two such peaks is ≥ 1s

The above spec. sheet features our standard products. For further options please contact your local Miba Resistors representative

sales.mra@miba.com · US: sales@mibaresistors.com

Series LXP-150 TO-247

150 W Thick Film Resistor for high-frequency and pulse-loading applications

AEC-Q200 qualified

Miba Resistors offers the completely encapsulated and insulated TO-247 package for low ohmic value and Non-Inductive design for high-frequency and pulse-loading applications. Ideal use for power supplies. The LXP-150 series is rated at 150W mounted to a heat sink.

Features

- 150 W operating power
- **TO-247 package** configuration
- Clip mounting simplifies attachment to heat sink
- Non-Inductive design

Technical Specifications

Resistance value	0.2 Ω ≤ 1 MΩ
Resistance tolerance	±1 % to ±10 % ±0.5 % on special request for limited ohmic values
Temperature coefficient	> 10R: ±50 ppm/°C referenced to 25°C, ΔR taken at +105°C (other TCR on special request for limited ohmic values)
Power rating	150 W at 25°C bottom case temperature
Maximum operating voltage	700 V DC
Dielectric strength	1800 V AC
Insulation resistance	min. 10 GΩ
Momentary overload	2 times rated power, but no more than 1.5 time max. continuous operating voltage, last 5s, ΔR ≤ ±(0.3%R + 0.001Ω)
Load life	2,000 hours at rated power, MIL-R-39009D ΔR ≤ ±(1.0%R + 0.001Ω)
Moisture resistance	MIL-Std.-202, method 106, ΔR ≤ ±(0.5%R + 0.001Ω)
Thermal schock	MIL-Std.-202, method 107, Cond. F ΔR ≤ ±(0.3%R + 0.001Ω)
Terminal strength	MIL-Std.-202, method 211, Cond. A (pull test) 2.4 N ΔR ≤ ±(0.2%R + 0.001Ω)
Vibration, high frequency	MIL-Std.-202, method 204, Cond. D ΔR ≤ ±(0.2%R + 0.001Ω)
Working temperature	-55°C to +175°C
Lead material	tinned copper
Weight	~4,2 g

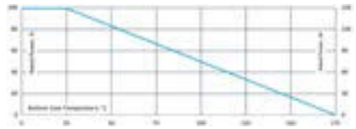

Derating (thermal resist.) LXP-150:
1.00 W/K (1.0 K/W)

Without a heat sink, when in open air at 45°C, the LXP-150 is rated for 4.5 W.

How to make a request

LXP-150_Ohmic Value_Tolerance

For example:
LXP-150 50R 5%

Application Standard

- IEC60115-1 : 2001 (GB/T5729-2003)
- MIL-STD-202
- MIL-R-39009D

Dimensions in mm [inches]

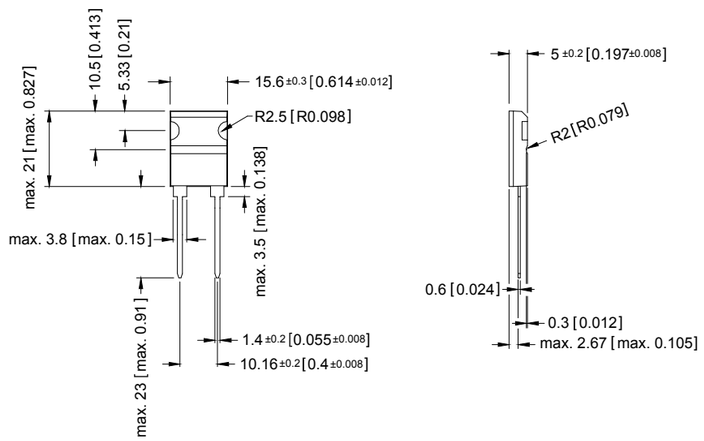

The above spec. sheet features our standard products. For further options please contact your local Miba Resistors representative.

sales.mra@miba.com · US: sales@mibaresistors.com

Series LHP-150 TO-247

150 W Thick Film Resistor for high-frequency and pulse-loading applications

AEC-Q200 qualified

Miba Resistors offers the completely encapsulated and insulated TO-247 package for low ohmic value and Non-Inductive design for high-frequency and pulse-loading applications. Ideal use for power supplies. The LHP-150 series is rated at 150 W mounted to a heat sink.

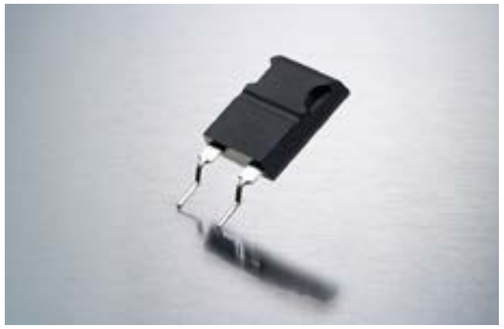

Features

- 150 W operating power
- **TO-247 package** configuration
- Resistor package completely insulated from heat sink
- Non-Inductive design

Technical Specifications

Resistance value	0.2 Ω ≤ 1 MΩ
Resistance tolerance	±5 % to ±10 % ±0.5 % on special request for limited ohmic values
Temperature coefficient	±150 ppm/°C (+25°C to +105°C, ref. to +25°C)
Power rating	150 W at 25°C bottom case temperature
Maximum operating voltage	700 V DC
Dielectric strength	1800 V AC
Insulation resistance	min. 10 GΩ
Momentary overload	2 times rated power, but no more than 1.5 time max. continuous operating voltage, last 5s, ΔR ≤ ±(0.5%R + 0.001Ω)
Load life	2,000 hours at rated power, MIL-R-39009D ΔR ≤ ±(1.0%R + 0.001Ω)
Moisture resistance	MIL-Std.-202, method 106, ΔR ≤ ±(0.5%R + 0.001Ω)
Thermal schock	MIL-Std.-202, method 107, Cond. F ΔR ≤ ±(0.3%R + 0.001Ω)
Terminal strength	MIL-Std.-202, method 211, Cond. A (pull test) 2.4 N ΔR ≤ ±(0.2%R + 0.001Ω)
Vibration, high frequency	MIL-Std.-202, method 204, Cond. D ΔR ≤ ±(0.2%R + 0.001Ω)
Working temperature	-55°C to +175°C
Lead material	tinned copper
Weight	~4 g

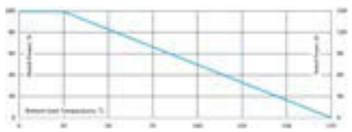

Derating (thermal resist.) LHP-150:
1.00 W/K (1.0 K/W)

Without a heat sink, when in open air at 45°C, the LHP-150 is rated for 4.5 W.

How to make a request

LHP-150_Ohmic Value_Tolerance

For example:
LHP-150 50R 5%

Application Standard

- IEC60115-1 : 2001 (GB/T5729-2003)
- MIL-STD-202
- MIL-R-39009D

Soldering Note:
During surface mount soldering, the soldering temp. profile **must not** cause the metal tab of this device to **exceed 245°C**.

Dimensions in mm [inches]

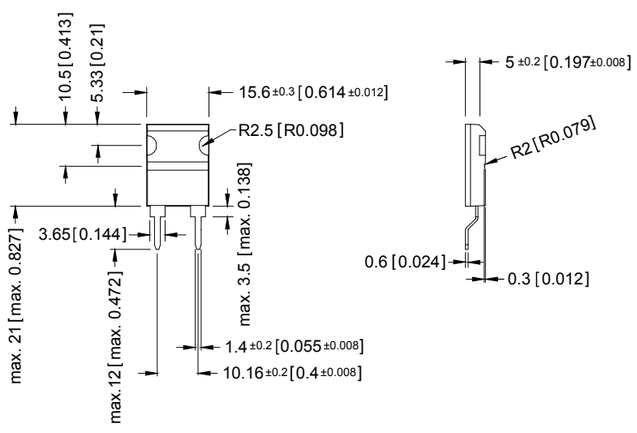

Soldering Template

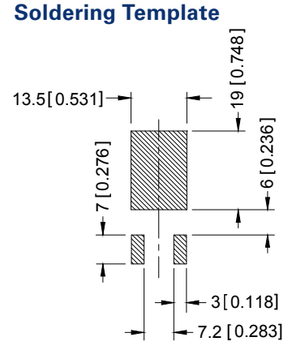

The above spec. sheet features our standard products. For further options please contact your local Miba Resistors representative

sales.mra@miba.com · US: sales@mibaresistors.com

Series MXP 35 TO-220

35 W Thick Film Resistor for high-frequency and pulse-loading applications

Features

- 35 W operating power
- **TO-220 package** configuration
- Single-screw mounting simplifies attachment to heat sink
- Molded case for environmental protection
- Resistor element is electrically insulated from the metal sink tab
- Standard lead form for easier fit
- Non-Inductive design
- ROHS compliant
- Materials in accordance with UL 94 V-0

Technical Specifications

Resistance value	0.05 Ω ≤ 1 MΩ (other values on special request)
Resistance tolerance	±1 % to ± 10 % ±0.5 % on special request for limited ohmic values
Temperature coefficient	< 3 Ω: ask for details ≥ 3 Ω < 10 Ω: ±100 ppm + 0.002 Ω/°C ≥ 10 Ω: ±50 ppm/°C (referenced to 25 °C, ΔR taken at +85°C)
Power rating	35 W at 25°C bottom case temperature
Maximum operating voltage	350 V
Dielectric strength voltage	1,800 V AC
Insulation resistance	> 10 GΩ at 1,000 V DC
Momentary overload	2x rated power with applied voltage not to exceed 1.5x maximum continuous operating voltage for 5 sec. ΔR ±(0.3 % + 0.01 Ω) max.
Load life	MIL-R-39009, 2,000 hours at rated power, ΔR ± (1.0 % + 0.01 Ω) max.
Moisture resistance	MIL-STD-202, method 106 ΔR = (0.5 % + 0.01 Ω) max.
Thermal shock	MIL-STD-202, method 107, Cond. F, ΔR = (0.3 % + 0.01 Ω) max.
Working temperature range	-55°C to +175°C
Terminal strength	MIL-STD-202, method 211, Cond. A (Pull Test) 2.4 N, ΔR = (0.2 % + 0.01 Ω) max.
Vibration, high frequency	MIL-STD-202, method 204, Cond. D, ΔR = (0.2 % + 0.01 Ω) max.
Lead material	tinned copper
Torque	0.7 Nm to 0.9 Nm
Heat resistance to cooling plate	Rth < 4.28 K/W
Weight	~2 g

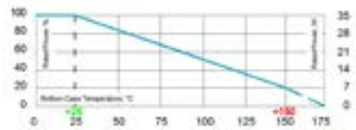

Derating (thermal resist.) MXP-35:
0.23 W/K (4.28 K/W)

Without a heat sink, when in open air at 25°C, the MXP-35 is rated for 2.50 W. Derating for temperature above 25°C is 0.02 W/K.

Case temperature must be used for definition of the applied power limit. Case temperature measurement must be done with a thermocouple contacting the center of the component mounted on the designed heat sink. Thermal grease should be applied properly.

How to make a request

MXP_Ohmic Value_Tolerance

For example:
MXP 20R 10%

Dimensions in mm [inches]

The above spec. sheet features our standard products. For further options please contact your local Miba Resistors representative.

sales.mra@miba.com · US: sales@mibaresistors.com

Series MXP 35 TO-220

Pulse Energy Curve (typical rating for MXP 35)

Note: These energy values are reference values → depending on ohmic value e.g. 1 Ω to 10 Ω and used resistive paste, a variation in max. energy load capability is possible

Test procedure

Every test resistor was mounted with thermal compound (0.9 W/mK) on a water cooled heatsink

- Constant inlet water temperature: +50°C
- The test time of each tested resistor: 10min.
- Break time between two pulses: 1sec.
- To determine good / defect parts the ohmic value was measured before and after tests: a change of tolerance of more than 0.1% means defect

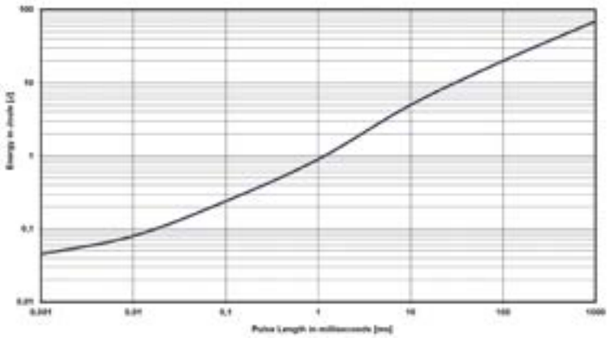

Description of Pulse Energy Curve

- Shape of pulse = e-function
- Time between two pulses = 1 second
- Pulse length = time constant of 1 tau (1 means ... tau = 1ms)

Example

At 1 ms tau the MXP 35 with e.g. 1 Ω to 10 Ω can withstand an energy level of about 0.9 J, when the pulse pause time is ≥ 1s

At a symmetrical frequency > 1 kHz at pulse length ≥ 10 µsec. the maximum applied pulse energy for MXP 35 is a result out of the nominal power 35 W divided by the operating frequency (at 25°C bottom case) (E = 35 W / F)

Pulse Power Curve (typical rating for MXP 35)

The power curve shows the max. possible power which can be applied for a certain duration. Referring to the same test procedure as described above.

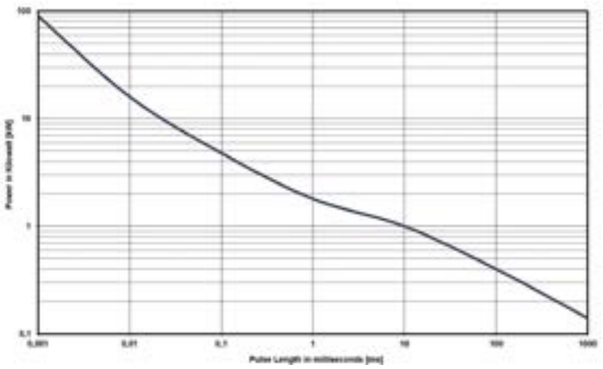

Description of Pulse Power Curve

- Shape of pulse = e-function
- Time between two pulses = 1 second
- Pulse length = time constant of 1 tau (1 means ... tau = 1ms)

Example

For the time-constant of 1 ms you can apply about 1.8 kW max. (Pp = 2*E / T)→, if the time between two such peaks is ≥ 1s

The above spec. sheet features our standard products. For further options please contact your local Miba Resistors representative
sales.mra@miba.com · US: sales@mibaresistors.com

Series MSP 35 SMD TO-220

(MHP 35 for high temperature soldering)

35 W Thick Film Resistor for surface mount including Metal Tab

35 W Film Power Resistor for surface mount including metal tab.

Features

- 35 W operating power
- **SMD TO-220 package** configuration
- Molded case for environmental protection
- Resistor element is electrically insulated from the metal sink tab
- Non-Inductive design
- ROHS compliant
- Materials in accordance with UL 94 V-0
- High soldering version available

Technical Specifications

Resistance value	0.1 Ω ≤ 1 MΩ (other values on special request)
Resistance tolerance	±1 % to ± 10 % ±0.5 % on special request for limited ohmic values
Temperature coefficient	< 3 Ω: ask for details ≥ 3 Ω < 10 Ω: ±100 ppm + 0.002 Ω/°C ≥ 10 Ω: ±50 ppm/°C (referenced to 25 °C, ΔR taken at +85°C)
Power rating	35 W at 25°C bottom case temperature
Maximum operating voltage	350 V
Dielectric strength voltage	1,800 V AC
Insulation resistance	> 10 GΩ at 1,000 V DC
Momentary overload	2x rated power with applied voltage not to exceed 1.5x maximum continuous operating voltage for 5 sec. ΔR ±(0.3 % + 0.01 Ω) max.
Load life	MIL-R-39009, 2,000 hours at rated power, ΔR ±(1.0 % + 0.01 Ω) max.
Moisture resistance	MIL-STD-202, method 106 ΔR = (0.5 % + 0.01 Ω) max.
Thermal shock	MIL-STD-202, method 107, Cond. F, ΔR = (0.3 % + 0.01 Ω) max.
Working temperature range	-55°C to +175°C
Terminal strength	MIL-STD-202, method 211, Cond. A (Pull Test) 2.4 N, ΔR = (0.2 % + 0.01 Ω) max.
Vibration, high frequency	MIL-STD-202, method 204, Cond. D, ΔR = (0.2 % + 0.01 Ω) max.
Lead material	nickel-plated copper, dip-tinned
Ground plate material	german silver; alternative material on request
Heat resistance to cooling plate	Rth < 4.28 K/W
Weight	~1,4 g

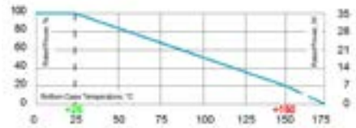

Derating (thermal resist.) MSP-35: 0.23 W/K (4.28 K/W)

Case temperature must be used for definition of the applied power limit. Case temperature measurement must be done with a thermo-couple contacting the center of the component mounted on the designed heat sink. Thermal grease should be applied properly.

How to make a request

MSP_Ohmic Value_Tolerance

For example:
MSP 39R 5%

Example for higher solder profile:
MHP 560R 1%

Soldering Note:
During surface mount soldering, the soldering temp. profile **must not** cause the metal tab of this device to **exceed 215°C**.

For solder profile temp. above 215°C up to max. 260°C, please use our alternative type MHP 35 SMD TO-220.

Dimensions in mm

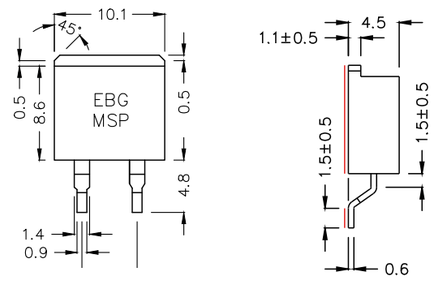

Tolerances ±0.2 unless otherwise noted!
TO-220 style power package for SMD applications 35 W power rating at 25°C case temerature.

Flatness of ground plate to contacts <0.1mm

Soldering Template

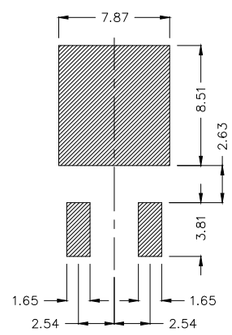

The above spec. sheet features our standard products. For further options please contact your local Miba Resistors representative.
sales.mra@miba.com · US: sales@mibaresistors.com

Series MSP 35 SMD TO-220

Pulse Energy Curve (typical rating for MSP 35)

Note: These energy values are reference values → depending on ohmic value e.g. 1 Ω to 10 Ω and used resistive paste, a variation in max. energy load capability is possible

Test procedure

Every test resistor was mounted with thermal compound (0.9 W/mK) on a water cooled heatsink

- Constant inlet water temperature: +50°C
- The test time of each tested resistor: 10min.
- Break time between two pulses: 1sec.
- To determine good / defect parts the ohmic value was measured before and after tests: a change of tolerance of more than 0.1% means defect

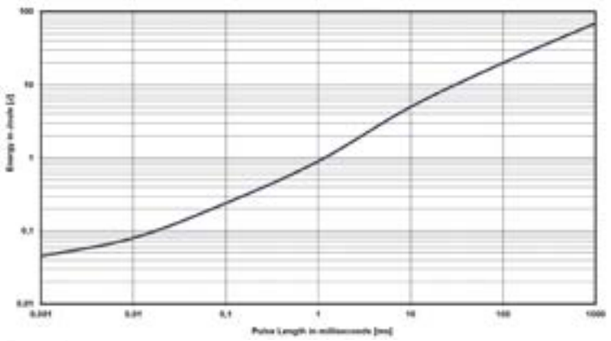

Description of Pulse Energy Curve

- Shape of pulse = e-function
- Time between two pulses = 1 second
- Pulse length = time constant of 1 tau (1 means ... tau = 1ms)

Example

At 1 ms tau the MXP 35 with e.g. 1 Ω to 10 Ω can withstand an energy level of about 0.9 J, when the pulse pause time is ≥ 1s

At a symmetrical frequency > 1 kHz at pulse length ≥ 10 µsec. the maximum applied pulse energy for MXP 35 is a result out of the nominal power 35 W divided by the operating frequency (at 25°C bottom case) (E = 35 W / F)

Pulse Power Curve (typical rating for MSP 35)

The power curve shows the max. possible power which can be applied for a certain duration. Referring to the same test procedure as described above.

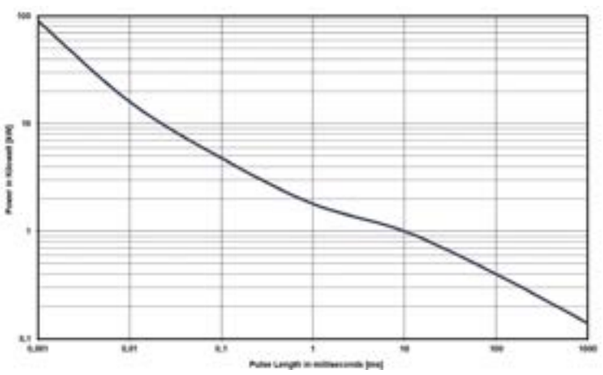

Description of Pulse Power Curve

- Shape of pulse = e-function
- Time between two pulses = 1 second
- Pulse length = time constant of 1 tau (1 means ... tau = 1ms)

Example

For the time-constant of 1 ms you can apply about 1.8 kW max. (Pp = 2*E / T)→, if the time between two such peaks is ≥ 1s

The above spec. sheet features our standard products. For further options please contact your local Miba Resistors representative

sales.mra@miba.com · US: sales@mibaresistors.com

Series AXP-50

50 W Power Resistor with four wire terminals

The new design with its non-inductive thick film Metal Oxide Technology prevents potential problems with clearance and creeping distance from terminal to base plate by means of flexible connecting leads.

This unique design allows you to use this elements in the following areas: variable speed drives, power supplies, control devices, telecommunications, robotics, motor controls and other switching devices.

Features

- 1x 50 W / 2x 20 W / 3x 10 W operating power
- Non-Inductive design
- ROHS compliant
- Materials in accordance with UL 94 V-0

Technical Specifications

Resistance value	1 Ω ≤ 1 MΩ
Resistance tolerance	±1 % to ±10 %
Temperature coefficient	±50 ppm/°C to ±250 ppm/°C (at +85°C ref. to + 25°C)
Power rating	up to 50 W at 85°C bottom case temperature (see configurations)
Maximum working voltage	500 V **(up to 1,000 V DC on special request = "S"-version)**
Electric strength voltage	5 kV DC (3 kV AC, higher values on special request) between terminal and case
Internal electric strength between R1 & R2	5 kV DC
Isolation voltage between R1 & R2	500 V (higher on special request)
Working temperatur range	-55°C to +155°C
Mounting - torque	1.0 Nm to 1.2 Nm
Standard cable length	100 mm (other lengths on special request)
Standard cable type	4GKW, 0,5 mm², black
Weight	~22 g

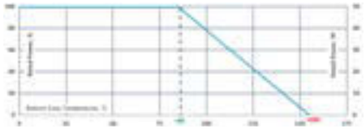

Derating (thermal resist.) AXP-50:
0.995 W/K (1.005 K/W) (for conf. 1, 2 and 3)

Best results can be reached by using a thermal transfer compound with a heat conductivity of at least 1 W/mK. The flatness of the cooling plate must be better than 0.05 mm overall. Surface roughness should not exceed 6.4 µm.

Suggested Mounting Procedure:

1.) Position component and press down by hand
2.) Fix both mounting screws (M3) with 0.1 to 0.2 Nm torque
3.) Apply final torque to mounting screws of 1.0 to 1.2 Nm

Dimensions in mm [inches]

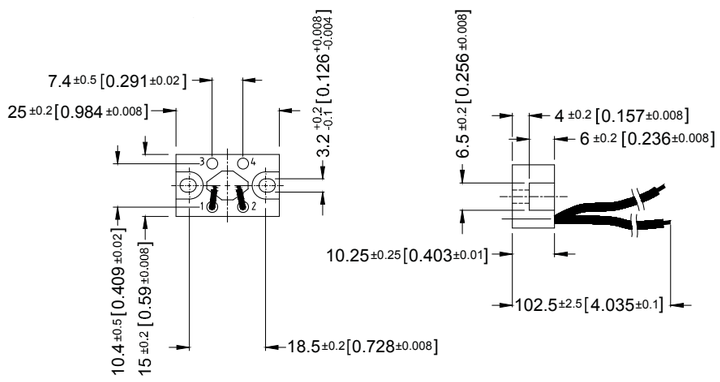

How to make a request

AXP-50-Configuration_Ohmic Value_ Tolerance

For example:
AXP-50-1 1K 10% or AXP-50-4 2x50R 5%

Exampe for higher working voltage:
AXP-50-1-S 55K 5%

Configurations (P / package)

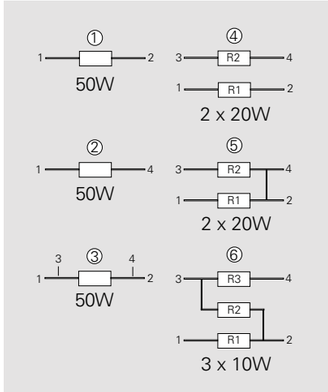

Version 5: ohmic value between contact 2 and 4 aprox. 3mΩ

The above spec. sheet features our standard products. For further options please contact your local Miba Resistors representative.

sales.mra@miba.com · US: sales@mibaresistors.com

Series AXP-100 B

100 W Power Resistor with four wire terminals, version B for enforced mechanical stability

The new design with its non-inductive thick film Metal Oxide Technology prevents potential problems with clearance and creeping distance from terminal to base plate by means of flexible connecting leads.

This unique design allows you to use this elements in the following areas: variable speed drives, power supplies, control devices, telecommunications, robotics, motor controls and other switching devices.

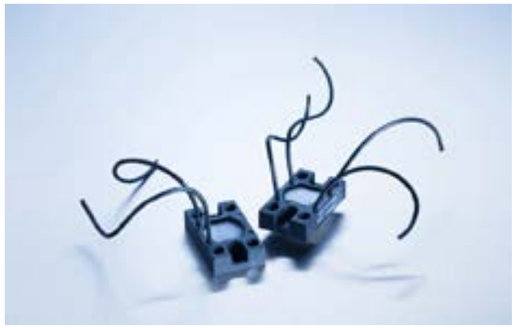

Features

- 1x 100 W / 2x 38 W / 3x 17 W operating power
- Non-Inductive design
- ROHS compliant
- Materials in accordance with UL 94 V-0

Technical Specifications

Resistance value	1 Ω ≤ 1 MΩ
Resistance tolerance	±1 % to ±10 %
Temperature coefficient	±50 ppm/°C to ±250 ppm/°C (at +85°C ref. to + 25°C)
Power rating	up to 100 W at 85°C bottom case temperature (see configurations)
Maximum working voltage	500 V **(up to 1,500 V DC on special request = "S"-version)**
Short time overload	1,5x rated power for 10 sec, ΔR = 0.4% max. (for conf. 1, 2 and 3)
Electric strength voltage	5 kV DC (3 kV AC, higher values on special request) between terminal and case
Internal electric strength between R1 & R2	5 kV DC
Working temperatur range	-55°C to +155°C
Mounting - torque	1.0 Nm to 1.2 Nm
Standard cable length	100 mm (other lengths on special request)
Standard cable type	PVC 0,75 mm², 20-AWG black
Weight	~22 g

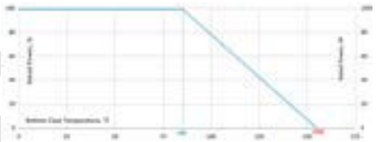

Derating (thermal resist.) AXP-100 B: 1.42 W/K (0.70 K/W) (for conf. 1, 2 and 3)

Best results can be reached by using a thermal transfer compound with a heat conductivity of at least 1 W/mK. The flatness of the cooling plate must be better than 0.05 mm overall. Surface roughness should not exceed 6.4 µm.

Suggested Mounting Procedure:

1.) Position component and press down by hand
2.) Fix both mounting screws (M4) with 0.1 to 0.2 Nm torque
3.) Apply final torque to mounting screws of 1.0 to 1.2 Nm

Dimensions in mm [inches]

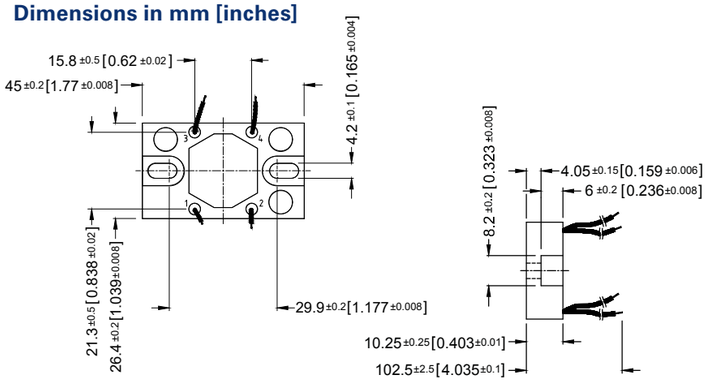

Boreholes distance from min. 30.0 mm to max. 37.0 mm

How to make a request

AXP-Configuration B_Ohmic Value_ Tolerance

For example:
AXP-1 B 2K 10% or AXP-4 B 2x50R 5%

Example for higher working voltage:
AXP-1-B-S 55K 5%

Configurations (P / package)

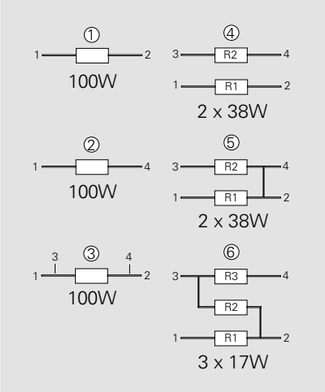

Version 5: ohmic value between contact 2 and 4 aprox. 3mΩ

The above spec. sheet features our standard products. For further options please contact your local Miba Resistors representative
sales.mra@miba.com · US: sales@mibaresistors.com

Series AXP-150

150 W Plane Non-Inductive Power Resistor

Features

- 1x150 W / 2x60 W / 3x33 W operating power
- **SOT-227 mould package**
- Two different terminal options available
- Good mechanical reliability
- Non-Inductive design

Technical Specifications

Resistance value	0.5 Ω ≤ 1 MΩ
Resistance tolerance	±1 % to ±10 %
Temperature coefficient	±50 ppm/°C to ±250 ppm/°C (+25°C to +105°C, ref. to +25°C)
Power rating	150 W at 70°C bottom case temperature (see configurations)
Maximum operating voltage	1500 V DC
Capacitance (mass)	36 pF
Capacitance (parallel)	12 pF
Inductance	≤ 50 nH
Electric clearance / creepage distance	2 terminal types available (see below)
Load life	1,000 hours at rated power, BCT at 70°C, ΔR ≤ ±(1.0%R + 0.001Ω)
Moisture resistance	56 days / 40°C RH ≥ 95% ΔR ≤ ±(0.25%R + 0.001Ω)
Thermal schock	-40°C to +125°C, 5 times, ΔR ≤ ±(0.25%R + 0.001Ω)
Vibration, high frequency	MIL-Std.-202, method 204, Cond. D ΔR ≤ ±(0.2%R + 0.001Ω)
Dielectric strength	5 kV DC, 3 kV AC (higher on special request)
Base plate installation	M4 screw, max. torque 1.3 Nm
Contact terminal	M4 screw, max. torque 1.0 Nm
Operating temperature range	-55°C to +155°C
Weight	~18 g

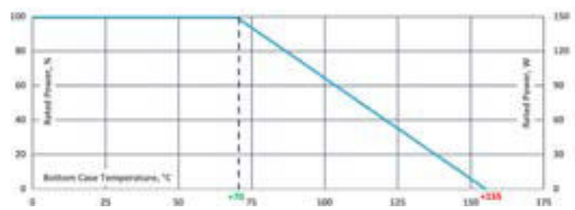

Derating (thermal resist.) AXP-150: 1.76 W/K (0.57 K/W)

Without a heat sink, when in open air at 25°C, the AXP-150 is rated for 3.5 W.

How to make a request

AXP-150-Configuration_Terminal Type_ Ohmic Value_Tolerance

For example:
AXP-150-2-C 50R 5%

Configurations (P / package)

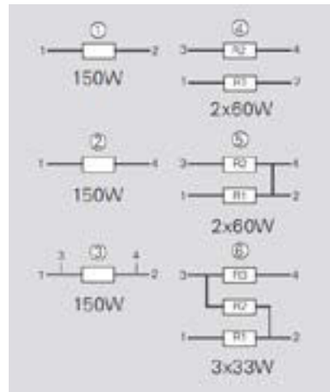

Version 5: ohmic value between contact 2 and 4 aprox. 3mΩ

The above spec. sheet features our standard products. For further options please contact your local Miba Resistors representative.
sales.mra@miba.com · US: sales@mibaresistors.com

Series AXP-150

Terminal B
dimensions in mm [inches]

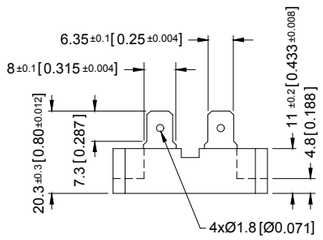

Terminal (#1 ~ #4) linear distance:

#1 to #2#3 to #4	≥7 mm
#1 to #3#2 to #4	≥19 mm
#1 to #4#2 to #3	≥20 mm
Terminal to board	≥11 mm

When using "insertion type terminal" the distance reduced by 1 mm

Terminal (#1 ~ #4) creep distance:

#1 to #2#3 to #4	≥10 mm
#1 to #3#2 to #4	≥23 mm
#1 to #4#2 to #3	≥26 mm
Terminal to board	≥13 mm

When using "insertion type terminal" the distance reduced by 1 mm

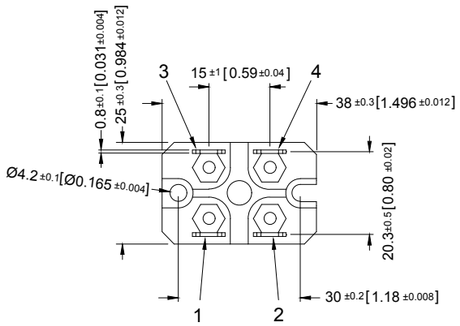

Terminal C dimensions in mm [inches]
(Terminal standard length = 100mm, others on special request)

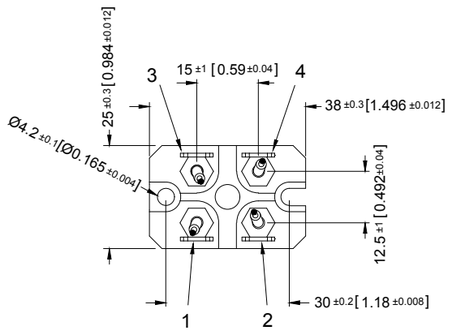

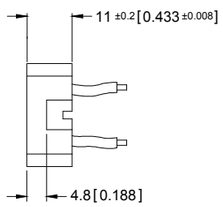

The above spec. sheet features our standard products. For further options please contact your local Miba Resistors representative
sales.mra@miba.com · US: sales@mibaresistors.com

Series AXS-600 / AXF-600 / AXP-600

600 W Power Resistor at 125°C bottom case, different terminal options available

Due to our Non-Inductive design,the AXS, AXF, AXP series is ideally suited for high-frequency and pulse-loading applications. Through direct mounting on a heat sink, significant cost advantage can be realized. Main applications are: variable speed drives, power supplies, control devices, telecommunications, robotics, motor controls and other switching devices.

Features

- Multiple resistors in 1 package
- Different terminal options available
- Non-Inductive design
- ROHS compliant
- Materials in accordance with UL 94 V-0
- General pulse load information (ask for details)
- Resistor is also available with preapplied PCM (Phase Change Material) (ask for details)

Technical Specifications

Resistance value	0.15 Ω ≤ 5 KΩ (higher values on special request)
Resistance tolerance	±5 % to 10 % (configuration 4,5,6 only tolerance ±10% possible)
Temperature coefficient	> 1R: ±250 ppm/°C (at +85°C ref. to +25°C) lower TCR on special request for limited ohmic values
Power rating	up to 600 W at 125°C bottom case temperature (see configurations)
Short time overload	1.25x rated power at 85°C bottom case temperature for 10 sec., ΔR = 0.4% max. (for conf. 1, 2 and 3)
Maximum working voltage	1,000 V DC (higher on request)
Voltage proof	dielectric strength up to 4,000 V DC against ground
Insulation resistance	> 10 GΩ at 1,000 V DC
Isolation voltage betweeen R1 & R2 & R3	500 V DC (1,000 V DC on special request)
Protection class	acc. to IEC 950/CSA22.2 950/M-89 and EN 60950.88:2
Heat resistance to cooling plate	Rth ≤ 0.083 K/W
Capacitance/mass	25 pF (typical), measuring frequency 10 kHz (depending on type/connection option, ask for details)
Serial inductivity	50 nH (typical), measuring frequency 10 kHz (depending on type/connection option, ask for details)
Working temperature range	-55°C to +155°C
Mounting - torque for base plate (static)	1.3 Nm to 1.5 Nm M4 screws
Mounting - torque for contacts (static)	1.1 Nm to 1.3 Nm M4 screws, screw-in depth max. 5mm
Standard cable length (AXP-600)	100 mm (other lengths on special request)
Standard cable type (AXP-600)	4GKW-AX 1800V
Weight	~16 g

How to make a request

AXS-600-Configuration_Ohmic Value_ Tolerance
AXF-600-Configuration_Ohmic Value_ Tolerance
AXP-600-Configuration_Ohmic Value_ Tolerance

For example:
AXS-600 27R 10% or
AXP-600 2x220R 5%

Configurations (P / package)

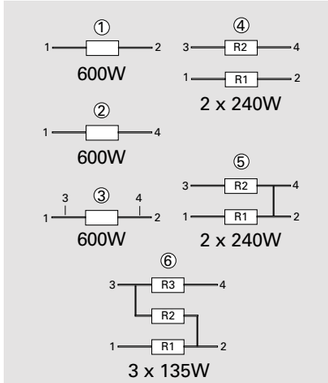

Version 5: ohmic value between contact 2 and 4 aprox. 3mΩ

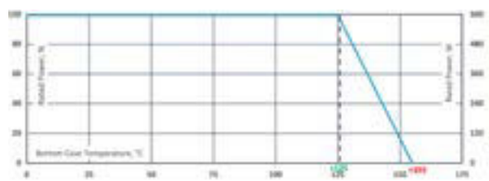

Derating (thermal resist.) AXS-600:
12.05 W/K (≤ 0.083 K/W) (for conf. 1, 2 and 3)

Best results can be reached by using a thermal transfer compound with a heat conductivity of at least 2.9 W/mK. The flatness of the cooling plate must be better than 0.05 mm overall. Surface roughness should not exceed 6.4 µm.

The above spec. sheet features our standard products. For further options please contact your local Miba Resistors representative.
sales.mra@miba.com · US: sales@mibaresistors.com

Series AXS-600 / AXF-600 / AXP-600

AXS-600 (screw connection)
dimensions in mm [inches]

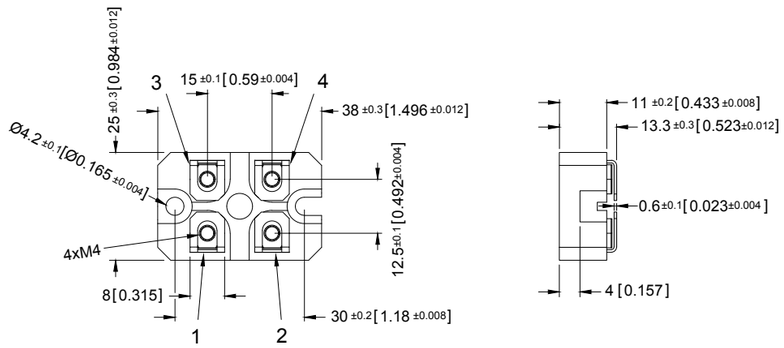

AXF-600 (fast-on connection)
dimensions in mm [inches]

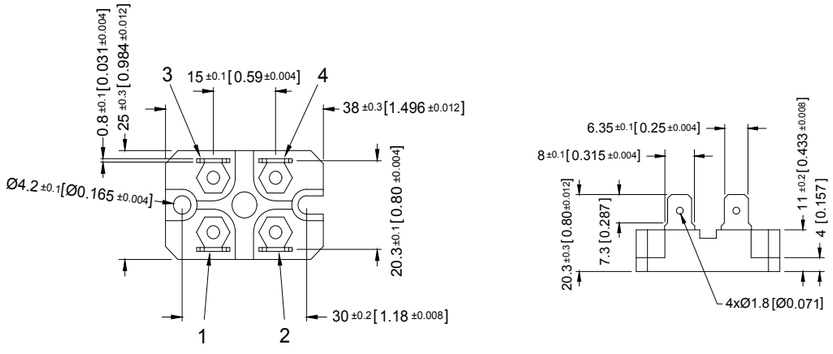

AXP-600 dimensions in mm [inches]
(Terminal standard length = 100mm,
others on special request)

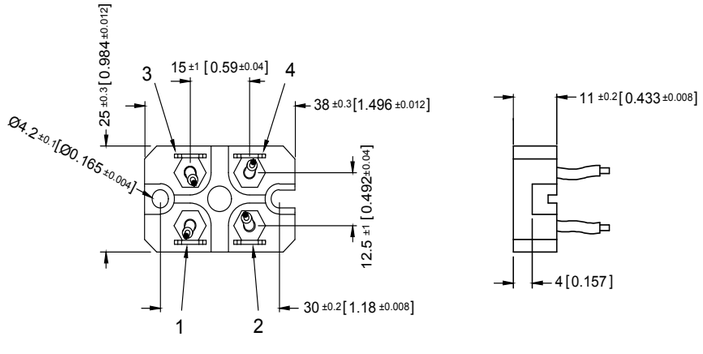

The above spec. sheet features our standard products. For further options please contact your local Miba Resistors representative
sales.mra@miba.com · US: sales@mibaresistors.com

Series GXP 120, SOT-227

120 W Power Resistor in the "ISOTOP" power device

AEC-Q200 qualified

Due to our Non-Inductive design, the GXP series is ideally suited for high-frequency and pulse-loading applications. Through direct mounting on a heat sink, significant cost advantage can be realized. Main applications are: variable speed drives, power supplies, control devices, telecommunications, robotics, motor controls and other switching devices.

Features

- multiple resistors in 1 package
- Non-Inductive design
- ROHS compliant
- Materials in accordance with UL 94 V-0
- Resistor is also available with UL certification (ask for details)
- Resistor is also available with preapplied PCM (Phase Change Material) (ask for details)

Technical Specifications

Resistance value	0.1 Ω ≤ 1 MΩ
Resistance tolerance	±1 % to ± 10 %
Temperature coefficient	> 1R: ±250 ppm/°C (at +85°C ref. to +25°C) lower TCR on special request for limited ohmic values
Power rating	up to 120 W at 85°C bottom case temperature (see configurations)
Short time overload	1.5x rated power at 85°C bottom case temperature for 10 sec., ΔR = 0.4% max. (for conf. 1, 2 and 3)
Maximum working voltage	500 V **(up to 1,000 V on special request = "S"-version)**
Partial discharge	up to 2,000 Vrms / 80pC Tests only on special request
Voltage proof	dielectric strength up to 4,000 V DC against ground
Insulation resistance	> 10 GΩ at 1,000 V DC
Isolation voltage betweeen R1 & R2	500 V DC (1,000 V DC on special request)
Protection class	acc. to IEC 950/CSA22.2 950/M-89 and EN 60950.88:2
Comparative Tracking Index (CTI)	standard > 200 V **(> 500 V on special request = "H"-version)**
Heat resistance to cooling plate	Rth < 0.45 K/W
Capacitance/mass	45 pF (typical), measuring frequency 10 kHz
Serial inductivity	GXP-1 typical 40 nH, measuring frequency 10 kHz
Working temperature range	-55°C to +155°C
Mounting - torque for base plate (static)	1.3 Nm to 1.5 Nm M4 screws
Mounting - torque for contacts (static)	1.1 Nm to 1.3 Nm M4 screws, screw-in depth max. 5 mm
Weight	~26 g

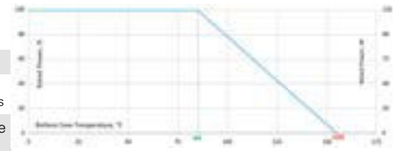

Derating (thermal resist.) GXP-120:
2.22 W/K (0.45 K/W) (for conf. 1, 2 and 3)

Best results can be reached by using a thermal transfer compound with a heat conductivity of at least 1 W/mK. The flatness of the cooling plate must be better than 0.05 mm overall. Surface roughness should not exceed 6.4 µm.

Dimensions in mm [inches]

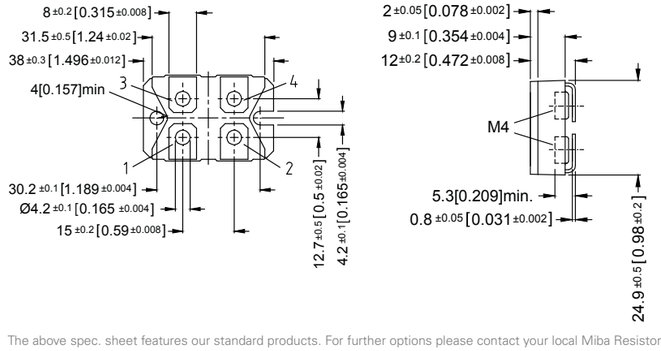

How to make a request

GXP-Configuration_Ohmic Value_Tolerance

For example:
GXP-1 1R 10% or GXP-4 2x50K 5%

Example for higher working voltage or CTI
GXP-4-S 2x40R 10% or GXPH-2 40K 10%

Configurations (P / package)

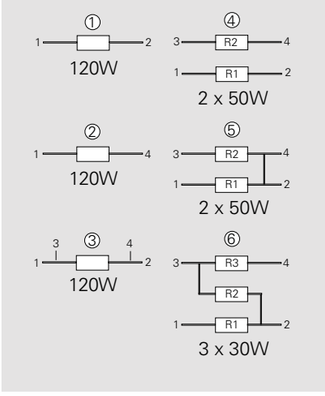

Version 5: ohmic value between contact 2 and 4 aprox. 3mΩ

The above spec. sheet features our standard products. For further options please contact your local Miba Resistors representative.
sales.mra@miba.com · US: sales@mibaresistors.com

Series GXP 120, SOT-227

AEC-Q200 qualified

Pulse Energy Curve (typical rating for GXP 120)

Note: These energy values are reference values depending on ohmic value e.g. 1 Ω to 10 Ω and used resistive paste, a variation in max. energy load capability is possible

Test procedure

Every test resistor was mounted with thermal compound (0.9 W/mK) on a water cooled heatsink

- Constant inlet water temperature: +50°C
- The test time of each tested resistor: 10min.
- Break time between two pulses: 1sec.
- To determine good / defect parts the ohmic value was measured before and after tests: a change of tolerance of more than 0.1% means defect

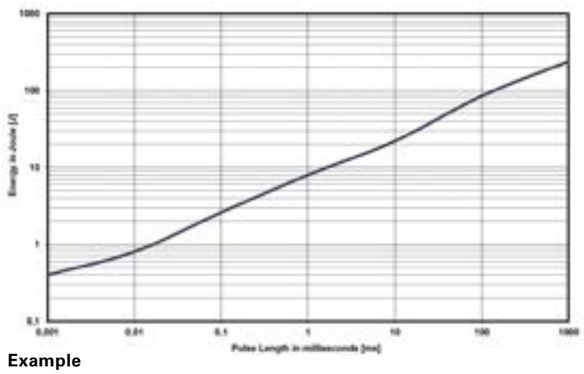

Description of Pulse Energy Curve

- Shape of pulse = e-function
- Time between two pulses = 1 second
- Pulse length = time constant of 1 tau (1 means ... tau = 1ms)

Example

At 1 ms tau the GXP 120 with e.g. 1 Ω to 10 Ω can withstand an energy level of about 8 J, when the pulse pause time is ≥ 1s

At a symmetrical frequency > 1 kHz at pulse length ≥ 10 µsec. the maximum applied pulse energy for GXP 120 is a result out of the nominal power 120 W divided by the operating frequency (at 85°C bottom case) (E = 120 W / F)

Pulse Power Curve (typical rating for GXP 120)

The power curve shows the max. possible power which can be applied for a certain duration. Referring to the same test procedure as described above.

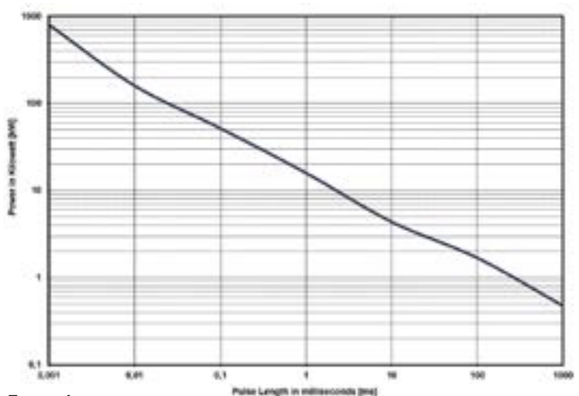

Description of Pulse Power Curve

- Shape of pulse = e-function
- Time between two pulses = 1 second
- Pulse length = time constant of 1 tau (1 means ... tau = 1ms)

Example

For the time-constant of 1 ms you can apply about 16 kW max. (Pp = 2*E / T)→, if the time between two such peaks is ≥ 1s

The above spec. sheet features our standard products. For further options please contact your local Miba Resistors representative

sales.mra@miba.com · US: sales@mibaresistors.com

Series HPP 150

150 W Power Resistor according to VDE 0160 und UL 94 V-0

Miba Resistors HPP series is rated at 150 W mounted to a heat sink. The increased height of the package makes the resistor ideal in applications where creeping distance must meet the VDE 0160 and UL 94 V-0 standards.

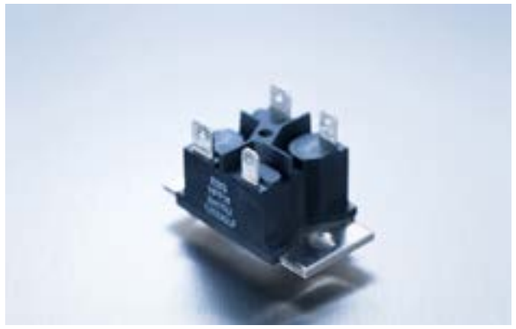

Features

- multiple resistors in 1 package
- Easy mounting using already existing infrastructure
- Non-Inductive design
- ROHS compliant
- Materials in accordance with UL 94 V-0 and VDE 0160
- Resistor is also available with UL certification (ask for details)
- Resistor is also available with preapplied PCM (Phase Change Material) (ask for details)

Technical Specifications

Resistance value	1 Ω ≤ 1 MΩ (other values on special request)
Resistance tolerance	±1 % to ±10 %
Temperature coefficient	±250 ppm/°C (at +85°C ref. to + 25°C) lower TCR on special request for limited ohmic values
Power rating	up to 150 W at 85°C bottom case temperature (see configurations)
Maximum working voltage	500 V **(up to 1,000 V DC on special request = "S"-version)**
Voltage proof	5,000 V DC, 3,000 V AC
Insulations resistance	> 10 GΩ at 1,000 V DC
Insolation voltage between R1 & R2	500 V DC (1,000 V DC on special request)
Comparative Tracking Index (CTI)	standard > 200 V **(> 500 V on special request = "H"-version)**
Heat resistance to cooling plate	Rth < 0.47 K/W
Capacitance/mass	45 pF (typical), measuring frequency 10 kHz
Working temperatur range	-55°C to +155°C
Mounting - torque for base plate (static)	1.3 Nm to 1.5 Nm M5 screws
Weight	~38 g

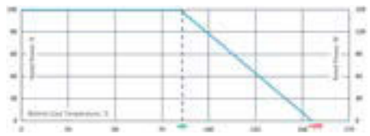

Derating (thermal resist.) HPP-150: 2.14 W/K (0.47 K/W) (for conf. 3)

Best results can be reached by using a thermal transfer compound with a heat conductivity of at least 1 W/mK. The flatness of the cooling plate must be better than 0.05 mm overall. Surface roughness should not exceed 6.4 µm.

Air distance contact to contact:

3	Contacts 1 and 2 resp. 3 and 4	
	- without fast-on-Plug:	9.2 mm
	- with fast-on-Plug:	8.2 mm
4	Contacts 1 and 4 resp. 2 and 3	
	- without fast-on-Plug:	21.9 mm
	- with fast-on-Plug:	20.9 mm
5	Contacts 2 resp. 3 and M5 - mounting screw with washer	
	- without fast-on-Plug:	16.3 mm
	- with fast-on-Plug:	15.9 mm
6	Contacts 1 resp. 4 and M5 - mounting screw with washer	
	- without fast-on-Plug:	15.5 mm
	- with fast-on-Plug:	15.0 mm

Creeping distance:

3	Contacts 1 and 2 resp. 3 and 4	
	- without fast-on-Plug:	20.2 mm
	- with fast-on-Plug:	19.0 mm
4	Contacts 1 and 4 resp. 2 and 3	
	- without fast-on-Plug:	27.4 mm
	- with fast-on-Plug:	25.8 mm
5	Contacts 2 resp. 3 to base plate	
	- without fast-on-Plug:	20.2 mm
	- with fast-on-Plug:	19.8 mm
6	Contacts 1 resp. 4 to base plate	
	- without fast-on-Plug:	19.5 mm
	- with fast-on-Plug:	18.9 mm

Dimensions in mm [inches]

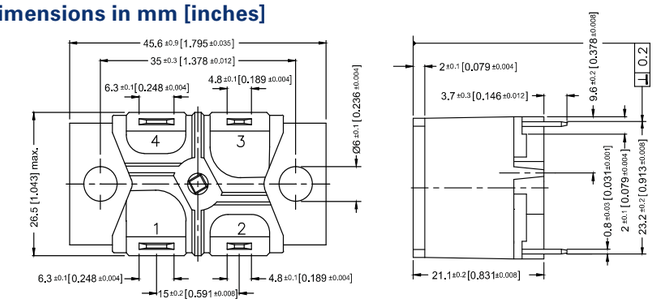

How to make a request

HPP-Configuration_Ohmic Value_Tolerance

For example:
HPP-5 2x2R 10% or HPP-6 3x8K 5%

Example for higher working voltage:
HPP-4-S 2x10R 5%

Configurations (P / package)

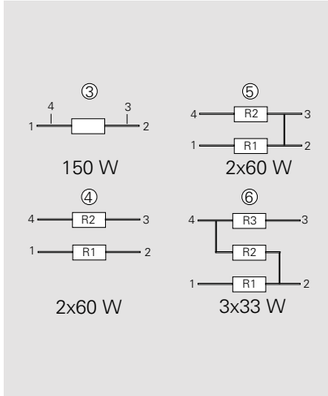

Version 5: ohmic value between contact 2 and 3 aprox. 3mΩ

The above spec. sheet features our standard products. For further options please contact your local Miba Resistors representative.

sales.mra@miba.com · US: sales@mibaresistors.com

Series HPP 150

2/2

Pulse Energy Curve (typical rating for HPP 150)

Note: These energy values are reference values → depending on ohmic value e.g. 1 Ω to 10 Ω and used resistive paste, a variation in max. energy load capability is possible

Test procedure

Every test resistor was mounted with thermal compound (0.9 W/mK) on a water cooled heatsink

- Constant inlet water temperature: +50°C
- The test time of each tested resistor: 10min.
- Break time between two pulses: 1sec.
- To determine good / defect parts the ohmic value was measured before and after tests: a change of tolerance of more than 0.1% means defect

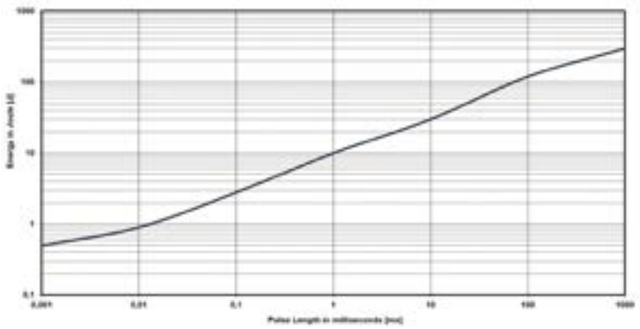

Description of Pulse Energy Curve

- Shape of pulse = e-function
- Time between two pulses = 1 second
- Pulse length = time constant of 1 tau (1 means ... tau = 1ms)

Example

At 1 ms tau the HPP 150 with e.g. 1 Ω to 10 Ω can withstand an energy level of about 10 J, when the pulse pause time is ≥ 1s

At a symmetrical frequency > 1 kHz at pulse length ≥ 10 µsec. the maximum applied pulse energy for HPP 150 is a result out of the nominal power 150 W divided by the operating frequency (at 85°C bottom case) (E = 150 W / F)

Pulse Power Curve (typical rating for HPP 150)

The power curve shows the max. possible power which can be applied for a certain duration. Referring to the same test procedure as described above.

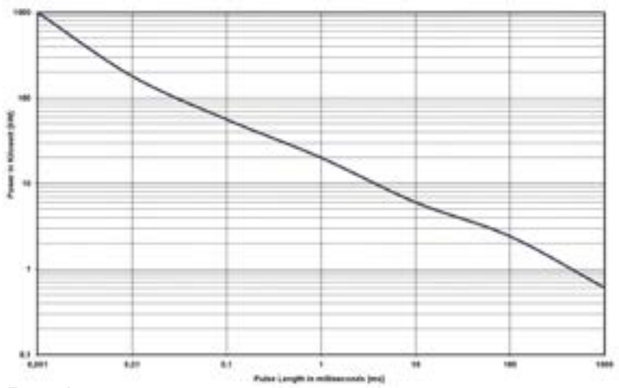

Description of Pulse Power Curve

- Shape of pulse = e-function
- Time between two pulses = 1 second
- Pulse length = time constant of 1 tau (1 means ... tau = 1ms)

Example

For the time-constant of 1 ms you can apply about 20 kW max. (Pp = 2*E / T)→, if the time between two such peaks is ≥ 1s

The above spec. sheet features our standard products. For further options please contact your local Miba Resistors representative
sales.mra@miba.com · US: sales@mibaresistors.com

Series VHP

180 W Power Resistor according to VDE 0160 und UL 94 V-0

1/2

Miba Resistors VHP series is rated at 180 W mounted to a heat sink. The increased height of the package makes the resistor ideal in applications where creeping distance must meet the VDE 0160 and UL 94 V-0 standards.

Features

- multiple resistors in 1 package
- Easy mounting using already existing infrastructure
- Non-Inductive design
- ROHS compliant
- Materials in accordance with UL 94 V-0 and VDE 0160
- Resistor is also available with UL certification (ask for details)
- Resistor is also available with preapplied PCM (Phase Change Material) (ask for details)

Technical Specifications

Resistance value	1 Ω ≤ 1 MΩ (higher values on special request)
Resistance tolerance	±1 % to ±10 %
Temperature coefficient	±250 ppm/°C (at +85°C ref. to + 25°C) lower TCR on special request for limited ohmic values
Power rating	up to 180 W at 85°C bottom case temperature (see configurations)
Maximum working voltage	500 V **(up to 1,000 V DC on special request = "S"-version)**
Voltage proof	5,000 V DC, 3,000 V AC
Insulations resistance	> 10 GΩ at 1,000 V DC
Insolation voltage between R1 & R2	500 V DC (1,000 V DC on special request)
Comparative Tracking Index (CTI)	standard > 200 V **(> 500 V on special request = "H"-version)**
Heat resistance to cooling plate	Rth < 0.40 K/W
Capacitance/mass	45 pF (typical), measuring frequency 10 kHz
Working temperatur range	-55°C to +155°C
Mounting - torque for base plate (static)	1.3 Nm to 1.5 Nm M5 screws
Weight	~38 g

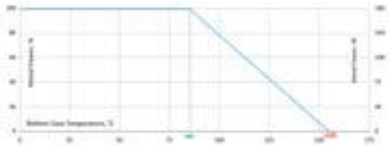

Derating (thermal resist.) VHP: 2.5 W/K (0.40 K/W) (for conf. 3)

Best results can be reached by using a thermal transfer compound with a heat conductivity of at least 1 W/mK. The flatness of the cooling plate must be better than 0.05 mm overall. Surface roughness should not exceed 6.4 µm.

Air distance contact to contact:

③	Contacts 1 and 2 resp. 3 and 4	
	- without fast-on-Plug:	9.2 mm
	- with fast-on-Plug:	8.2 mm
④	Contacts 1 and 4 resp. 2 and 3	
	- without fast-on-Plug:	21.9 mm
	- with fast-on-Plug:	20.9 mm
⑤	Contacts 2 resp. 3 and M5 - mounting screw with washer	
	- without fast-on-Plug:	16.3 mm
	- with fast-on-Plug:	15.9 mm
⑥	Contacts 1 resp. 4 and M5 - mounting screw with washer	
	- without fast-on-Plug:	15.5 mm
	- with fast-on-Plug:	15.0 mm

Creeping distance:

③	Contacts 1 and 2 resp. 3 and 4	
	- without fast-on-Plug:	20.2 mm
	- with fast-on-Plug:	19.0 mm
④	Contacts 1 and 4 resp. 2 and 3	
	- without fast-on-Plug:	27.4 mm
	- with fast-on-Plug:	25.8 mm
⑤	Contacts 2 resp. 3 to base plate	
	- without fast-on-Plug:	20.2 mm
	- with fast-on-Plug:	19.8 mm
⑥	Contacts 1 resp. 4 to base plate	
	- without fast-on-Plug:	19.5 mm
	- with fast-on-Plug:	18.9 mm

Dimensions in mm [inches]

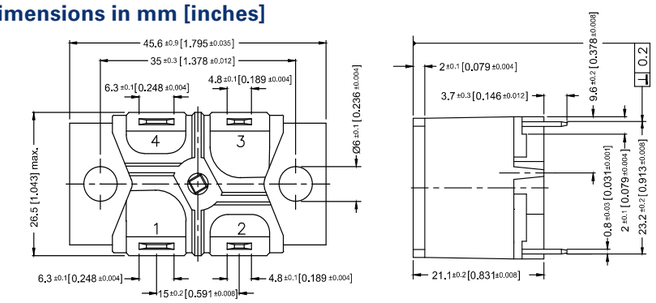

How to make a request

VHP-Configuration_Ohmic Value_Tolerance

For example:
VHP-5 2x2R 10% or VHP-6 3x8K 5%

Example for higher working voltage:
VHP-5-S 10R 5%

Configurations (P / package)

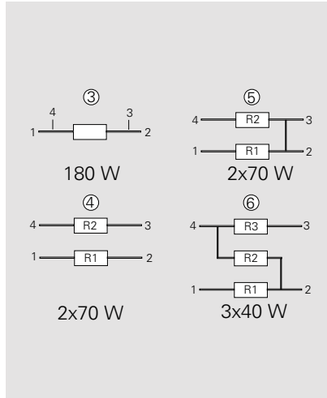

Version 5: ohmic value between contact 2 and 3 aprox. 3mΩ

The above spec. sheet features our standard products. For further options please contact your local Miba Resistors representative.
sales.mra@miba.com · US: sales@mibaresistors.com

Series VHP

2/2

Pulse Energy Curve (typical rating for VHP)

Note: These energy values are reference values → depending on ohmic value e.g. 1 Ω to 10 Ω and used resistive paste, a variation in max. energy load capability is possible

Test procedure

Every test resistor was mounted with thermal compound (0.9 W/mK) on a water cooled heatsink

- Constant inlet water temperature: +50°C
- The test time of each tested resistor: 10min.
- Break time between two pulses: 1sec.
- To determine good / defect parts the ohmic value was measured before and after tests: a change of tolerance of more than 0.1% means defect

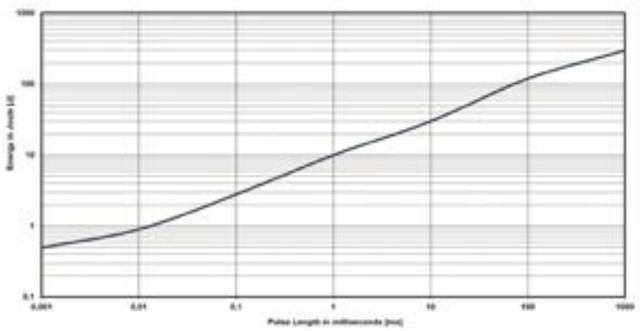

Description of Pulse Energy Curve

- Shape of pulse = e-function
- Time between two pulses = 1 second
- Pulse length = time constant of 1 tau (1 means ... tau = 1ms)

Example

At 1 ms tau the VHP with e.g. 1 Ω to 10 Ω can withstand an energy level of about 10 J, when the pulse pause time is ≥ 1s

At a symmetrical frequency > 1 kHz at pulse length ≥ 10 µsec. the maximum applied pulse energy for VHP is a result out of the nominal power 180 W divided by the operating frequency (at 85°C bottom case) (E = 180 W / F)

Pulse Power Curve (typical rating for VHP)

The power curve shows the max. possible power which can be applied for a certain duration.
Referring to the same test procedure as described above.

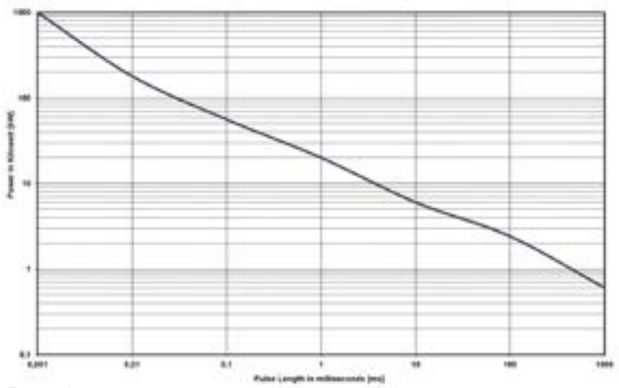

Description of Pulse Power Curve

- Shape of pulse = e-function
- Time between two pulses = 1 second
- Pulse length = time constant of 1 tau (1 means ... tau = 1ms)

Example

For the time-constant of 1 ms you can apply about 20 kW max. (Pp = 2*E / T)→, if the time between two such peaks is ≥ 1s

The above spec. sheet features our standard products. For further options please contact your local Miba Resistors representative
sales.mra@miba.com · US: sales@mibaresistors.com

Series HPS 150

150 W Power Resistor – only configuration 2 possible

1/2

Miba Resistors HPS series is rated at 150 W mounted to a heat sink. The increased height of the package makes this resistor ideal in applications where creeping distance must meet the VDE 0160 and UL 94 V-0 standards.
Main applications are: motor drives & controls, medical, frequency converters and instrumentation.

Features

- 150 W operating power
- Easy mounting using already existing infrastructure
- Non-Inductive design
- ROHS compliant
- Materials in accordance with UL 94 V-0 and VDE 0160
- Resistor is also available with UL certification (ask for details)
- Resistor is also available with preapplied PCM (Phase Change Material) (ask for details)

Technical Specifications

Resistance value	1 Ω ≤ 1 MΩ (other values on special request)
Resistance tolerance	±1 % to ±10 %
Temperature coefficient	±250 ppm/°C (at +85°C ref. to + 25°C) lower TCR on special request for limited ohmic values
Power rating	150 W at 85°C bottom case temperature
Maximum working voltage	500 V **(up to 1,000 V DC on special request = "S"-version)**
Voltage proof	5,000 V DC, 3,000 V AC
Insulations resistance	> 10 GΩ at 1,000 V DC
Comparative Tracking Index (CTI)	standard > 200 V **(> 500 V on special request = "H"-version)**
Heat resistance to cooling plate	Rth < 0.47 K/W
Capacitance/mass	45pF (typical), measuring frequency 10 kHz
Working temperatur range	-55°C to +155°C
Mounting - torque for base plate (static)	1.3 Nm to 1.5 Nm M5 screws
Mounting - torque for contacts (static)	1.1 Nm to 1.5 Nm M4 screws, screw-in depth max. 5 mm
Weight	~38 g

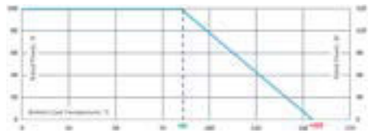

Derating (thermal resist.) HPS-150:
2.14 W/K (0.47 K/W)

Best results can be reached by using a thermal transfer compound with a heat conductivity of at least 1 W/mK. The flatness of the cooling plate must be better than 0.05 mm overall. Surface roughness should not exceed 6.4 µm.

Air distance contact to contact:

Contact to contact	> 9.2 mm
Contact to base plate	> 13.2 mm

(with mounting screw M5 and washer)

Creeping distance:

Contact to base plate	17.0 mm
Contact to contact	
- without PT-screw	> 22.8 mm
- with PT-screw	> 20.2 mm

Dimensions in mm [inches]

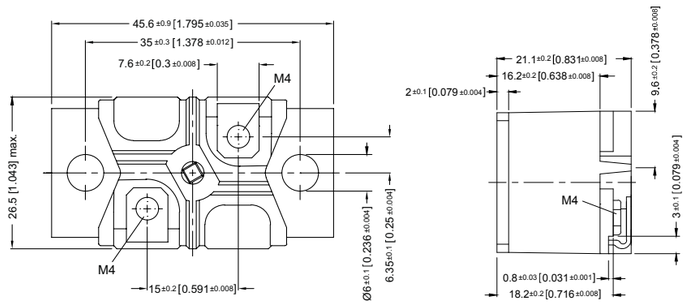

How to make a request

HPS-2_Ohmic Value_Tolerance

For example:
HPS-2 1R 10%

Example for higher working voltage:
HPS-2-S 40K 2%

Configuration

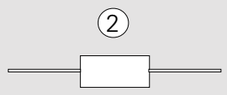

150W
only 1 configuration possible

The above spec. sheet features our standard products. For further options please contact your local Miba Resistors representative.
sales.mra@miba.com · US: sales@mibaresistors.com

Series HPS 150

2/2

Pulse Energy Curve (typical rating for HPS 150)

Note: These energy values are reference values → depending on ohmic value e.g. 1 Ω to 10 Ω and used resistive paste, a variation in max. energy load capability is possible

Test procedure

Every test resistor was mounted with thermal compound (0.9 W/mK) on a water cooled heatsink

- Constant inlet water temperature: +50°C
- The test time of each tested resistor: 10min.
- Break time between two pulses: 1sec.
- To determine good / defect parts the ohmic value was measured before and after tests: a change of tolerance of more than 0.1% means defect

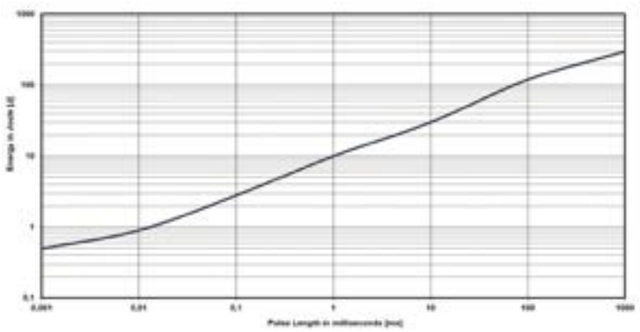

Description of Pulse Energy Curve

- Shape of pulse = e-function
- Time between two pulses = 1 second
- Pulse length = time constant of 1 tau (1 means ... tau = 1ms)

Example

At 1 ms tau the HPS 150 with e.g. 1 Ω to 10 Ω can withstand an energy level of about 10 J, when the pulse pause time is ≥ 1s

At a symmetrical frequency > 1 kHz at pulse length ≥ 10 µsec. the maximum applied pulse energy for HPS 150 is a result out of the nominal power 150 W divided by the operating frequency (at 85°C bottom case) (E = 150 W / F)

Pulse Power Curve (typical rating for HPS 150)

The power curve shows the max. possible power which can be applied for a certain duration. Referring to the same test procedure as described above.

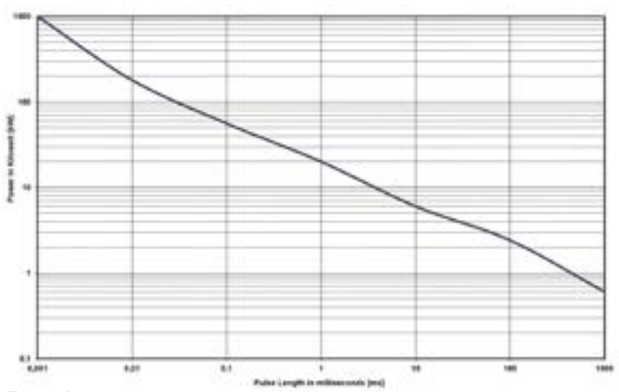

Description of Pulse Power Curve

- Shape of pulse = e-function
- Time between two pulses = 1 second
- Pulse length = time constant of 1 tau (1 means ... tau = 1ms)

Example

For the time-constant of 1 ms you can apply about 20 kW max. (Pp = 2*E / T)→, if the time between two such peaks is ≥ 1s

The above spec. sheet features our standard products. For further options please contact your local Miba Resistors representative

sales.mra@miba.com · US: sales@mibaresistors.com

Series HXP 200, SOT-227

200 W Power Resistor in the "ISOTOP" power device

AEC-Q200 qualified

1/2

Due to our Non-Inductive design, the HXP series is ideally suited for high-frequency and pulse-loading applications. Through direct mounting on a heat sink, significant cost advantage can be realized. Main applications are: variable speed drives, power supplies, control devices, telecommunications, robotics, motor controls and other switching devices.

Features

- multiple resistors in 1 package
- Non-Inductive design
- ROHS compliant
- Materials in accordance with UL 94 V-0
- Resistor is also available with UL certification (ask for details)
- Resistor is also available with preapplied PCM (Phase Change Material) (ask for details)

Technical Specifications

Resistance value	0.1 Ω ≤ 1 MΩ
Resistance tolerance	±1 % to ±10 %
Temperature coefficient	> 1R: ±250 ppm/°C (at +85°C ref. to +25°C) lower TCR on special request for limited ohmic values
Power rating	up to 200 W at 85°C bottom case temperature (see configurations)
Short time overload	1.25x rated power at 85°C bottom case temperature for 10 sec., ΔR = 0.4% max. (for conf. 1, 2 and 3)
Maximum working voltage	500 V **(up to 1,000 V on special request = "S"-version)**
Partial discharge	up to 2,000 Vrms / 80pC (Tests only on special request)
Voltage proof	dielectric strength up to 4,000 V DC against ground
Insulation resistance	> 10 GΩ at 1,000 V DC
Isolation voltage betweeen R1 & R2 & R3	500 V DC (1,000 V DC on special request)
Protection class	acc. to IEC 950/CSA22.2 950/M-89 and EN 60950.88:2
Comparative Tracking Index (CTI)	standard > 200 V **(> 500 V on special request = "H"-version)**
Heat resistance to cooling plate	Rth < 0.35 K/W
Capacitance/mass	45 pF (typical), measuring frequency 10 kHz
Serial inductivity	HXP-1 typical 40 nH, measuring frequency 10 kHz
Working temperature range	-55°C to +155°C
Mounting - torque for base plate (static)	1.3 Nm to 1.5 Nm M4 screws
Mounting - torque for contacts (static)	1.1 Nm to 1.3 Nm M4 screws, screw-in depth max. 5 mm
Weight	~26 g

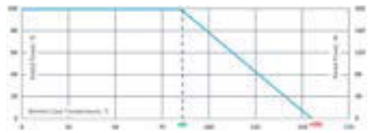

Derating (thermal resist.) HXP-200: 2.86 W/K (0.35 K/W) (for conf. 1, 2 and 3)

Best results can be reached by using a thermal transfer compound with a heat conductivity of at least 1 W/mK. The flatness of the cooling plate must be better than 0.05 mm overall. Surface roughness should not exceed 6.4 µm.

Dimensions in mm [inches]

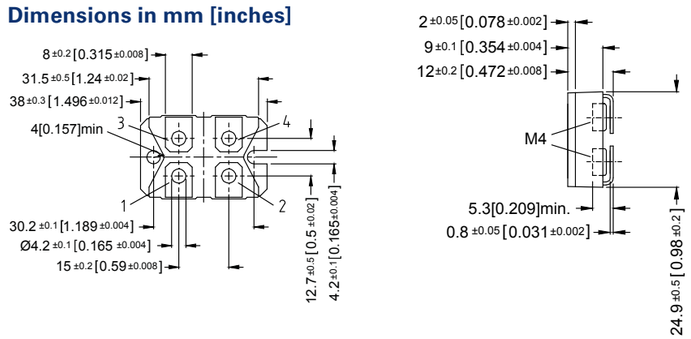

How to make a request

HXP-Configuration_Ohmic Value_Tolerance

For example:
HXP-1 1R 10% or HXP-4 2x50K 5%

Example for higher working voltage or CTI
HXP-4-S 2x40R 10% or HXPH-2 75K 5%

Configurations (P / package)

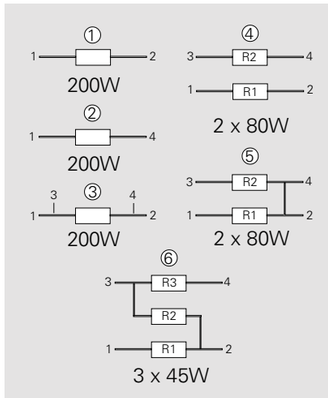

Version 5: ohmic value between contact 2 and 4 aprox. 3mΩ

The above spec. sheet features our standard products. For further options please contact your local Miba Resistors representative.

sales.mra@miba.com · US: sales@mibaresistors.com

Series HXP 200, SOT-227

AEC-Q200 qualified

Pulse Energy Curve (typical rating for HXP 200)

Note: These energy values are reference values → depending on ohmic value e.g. 1 Ω to 10 Ω and used resistive paste, a variation in max. energy load capability is possible

Test procedure

Every test resistor was mounted with thermal compound (0.9 W/mK) on a water cooled heatsink

- Constant inlet water temperature: +50°C
- The test time of each tested resistor: 10min.
- Break time between two pulses: 1sec.
- To determine good / defect parts the ohmic value was measured before and after tests: a change of tolerance of more than 0.1% means defect

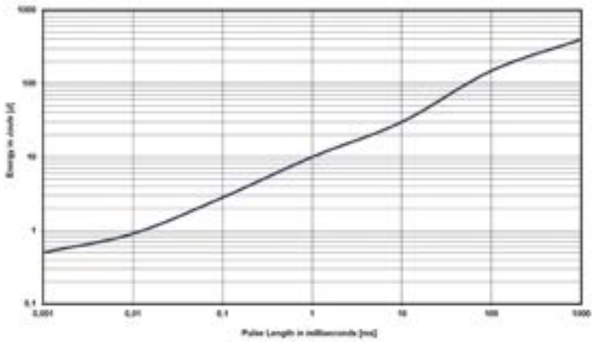

Description of Pulse Energy Curve

- Shape of pulse = e-function
- Time between two pulses = 1 second
- Pulse length = time constant of 1 tau (1 means ... tau = 1ms)

Example

At 1 ms tau the HXP 200 with e.g. 1 Ω to 10 Ω can withstand an energy level of about 10 J, when the pulse pause time is ≥ 1s

At a symmetrical frequency > 1 kHz at pulse length ≥ 10 µsec. the maximum applied pulse energy for HXP 200 is a result out of the nominal power 200 W divided by the operating frequency (at 85°C bottom case) (E = 200 W / F)

Pulse Power Curve (typical rating for HXP 200)

The power curve shows the max. possible power which can be applied for a certain duration. Referring to the same test procedure as described above.

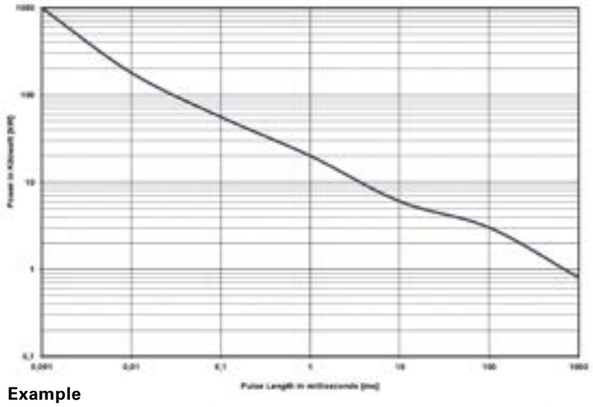

Description of Pulse Power Curve

- Shape of pulse = e-function
- Time between two pulses = 1 second
- Pulse length = time constant of 1 tau (1 means ... tau = 1ms)

Example

For the time-constant of 1 ms you can apply about 20 kW max. (Pp = 2*E / T)→, if the time between two such peaks is ≥ 1s

The above spec. sheet features our standard products. For further options please contact your local Miba Resistors representative
sales.mra@miba.com · US: sales@mibaresistors.com

Series HXP-600

600 W Power Resistor at 85°C bottom case

Due to our Non-Inductive design, the HXP series is ideally suited for high-frequency and pulse-loading applications. Through direct mounting on a heat sink, significant cost advantage can be realized. Main applications are: variable speed drives, power supplies, control devices, telecommunications, robotics, motor controls and other switching devices.

Features

- multiple resistors in 1 package
- Non-Inductive design
- ROHS compliant
- Materials in accordance with UL 94 V-0
- General pulse load information (ask for details)
- Resistor is also available with preapplied PCM (Phase Change Material) (ask for details)

Technical Specifications

Resistance value	0.15 Ω ≤ 5 KΩ (higher values on special request)
Resistance tolerance	±5 % to 10 % (configuration 4,5,6 only tolerance ±10% possible)
Temperature coefficient	depending on ohmic value (ask for details)
Power rating	up to 600 W at 85°C bottom case temperature (see configurations)
Short time overload	1.25x rated power at 85°C bottom case temperature for 10 sec., ΔR = 0.4% max. (for conf. 1, 2 and 3)
Maximum working voltage	1,000 V DC **(up to 2,000 V on special request = "S"-version)**
Partial discharge	up to 2,000 V on 80pC (Tests only on special request)
Voltage proof	dielectric strength up to 4,000 V DC against ground
Insulation resistance	> 10 GΩ at 1,000 V DC
Isolation voltage betweeen R1 & R2 & R3	500 V DC (1,000 V DC on special request)
Protection class	acc. to IEC 950/CSA22.2 950/M-89 and EN 60950.88:2
Comparative Tracking Index (CTI)	standard 500 V
Heat resistance to cooling plate	Rth < 0.12 K/W
Capacitance/mass	45 pF (typical), measuring frequency 10 kHz
Serial inductivity	HXP-1 typical 40 nH, measuring frequency 10 kHz
Working temperature range	-55°C to +155°C
Mounting - torque for base plate (static)	1.3 Nm to 1.5 Nm M4 screws
Mounting - torque for contacts (static)	1.1 Nm to 1.3 Nm M4 screws, screw-in depth max. 5mm
Weight	~27 g

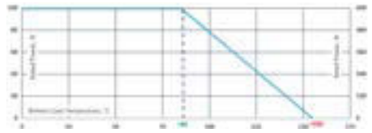

Derating (thermal resist.) HXP-600:
8.33 W/K (0.12 K/W) (for conf. 1, 2 and 3)

Best results can be reached by using a thermal transfer compound with a heat conductivity of at least 2.9 W/mK. The flatness of the cooling plate must be better than 0.05 mm overall. Surface roughness should not exceed 6.4 µm.

How to make a request

HXP-600-Configuration_Ohmic Value_ Tolerance

For example:
HXP-600-1 27R 10% or
HXP-600-4 2x220R 5%

Dimensions in mm [inches]

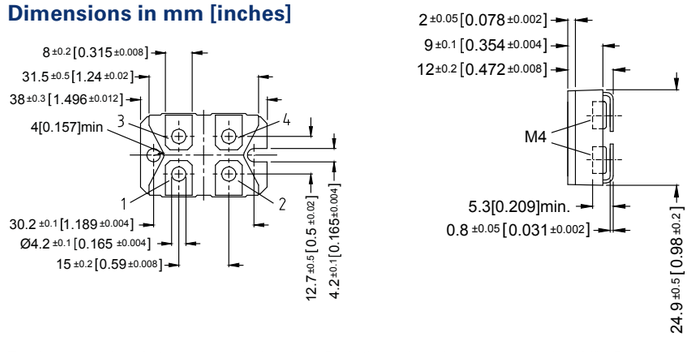

Configurations (P / package)

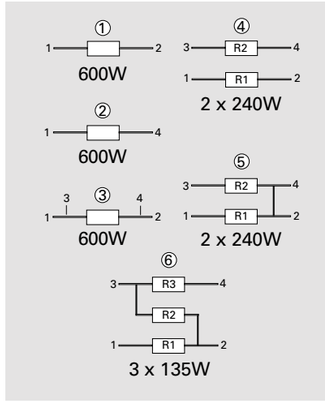

Version 5: ohmic value between contact 2 and 4 aprox. 3mΩ

The above spec. sheet features our standard products. For further options please contact your local Miba Resistors representative.
sales.mra@miba.com · US: sales@mibaresistors.com

Series PXP 200, SOT-227 (solder pin)

200 W Power Resistor at 85°C Bottom Case

Miba Resistors general medium power resistor. Main applications are variable speed drives, power supplies, control devices, telecom, robotics, motor controls and other switching designs. Specials and custom designed components on request.

Features

- multiple resistors in 1 package
- Non-Inductive design
- ROHS compliant
- Materials in accordance with UL 94 V-0
- Resistor is also available with preapplied PCM (Phase Change Material) (ask for details)

Technical Specifications

Resistance value	0.1 Ω ≤ 1 MΩ
Resistance tolerance	±1 % to ±10 %
Temperature coefficient	> 1R: ±250 ppm/°C (at +85°C ref. to +25°C) lower TCR on special request for limited ohmic values
Power rating	up to 200 W at 85°C bottom case temperature (see configurations)
Short time overload	1.25x rated power at 85°C bottom case temperature for 10 sec., ΔR = 0.4% max. (for conf. 1, 2 and 3)
Maximum working voltage	500 V DC **(up to 1,000 V on special request = "S"-version)**
Partial discharge	up to 2,000 Vrms / 80pC (tests only on special request)
Voltage proof	dielectric strength up to 4,000 V DC against ground
Insulation resistance	> 10 GΩ at 1,000 V DC
Isolation voltage betweeen R1 & R2 & R3	500 V DC (1,000 V DC on special request)
Heat resistance to cooling plate	Rth < 0.35 K/W
Capacitance/mass	45 pF (typical), measuring frequency 10 kHz
Serial inductivity	PXP-1 typical 40 nH, measuring frequency 10 kHz
Working temperature range	-55°C to +155°C
Mounting - torque for base plate (static)	1.3 Nm to 1.5 Nm M4 screws
Weight	~20 g

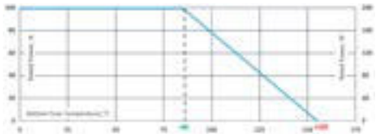

Derating (thermal resist.) PXP-200:
2.86 W/K (0.35 K/W) (for conf. 1, 2 and 3)

Best results can be reached by using a thermal transfer compound with a heat conductivity of at least 1 W/mK. The flatness of the cooling plate must be better than 0.05 mm overall. Surface roughness should not exceed 6.4 µm.

How to make a request

PXP-Configuration_Ohmic Value_Tolerance

For example:
PXP-1 4R7 5%

Example for higher working voltage:
PXP-1-S 4R7 10%

Dimensions in mm

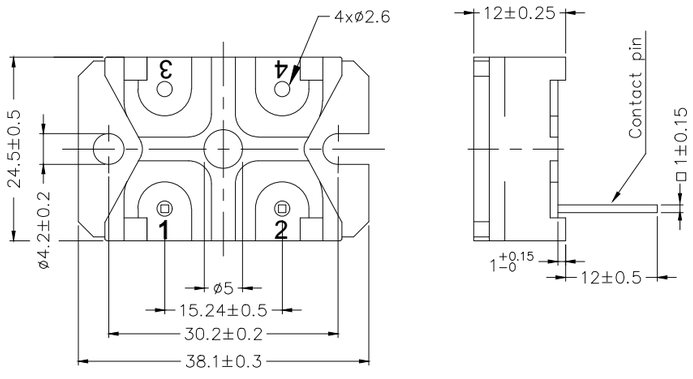

Configurations (P / package)

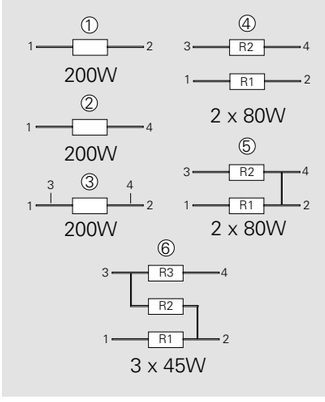

Version 5: ohmic value between contact 2 and 4 aprox. 3mΩ

The above spec. sheet features our standard products. For further options please contact your local Miba Resistors representative

sales.mra@miba.com · US: sales@mibaresistors.com

Series PXP 200, SOT-227 (solder pin)

Pulse Energy Curve (typical rating for PXP 200)

Note: These energy values are reference values → depending on ohmic value e.g. 1 Ω to 10 Ω and used resistive paste, a variation in max. energy load capability is possible

Test procedure

Every test resistor was mounted with thermal compound (0.9 W/mK) on a water cooled heatsink

- Constant inlet water temperature: +50°C
- The test time of each tested resistor: 10min.
- Break time between two pulses: 1sec.
- To determine good / defect parts the ohmic value was measured before and after tests: a change of tolerance of more than 0.1% means defect

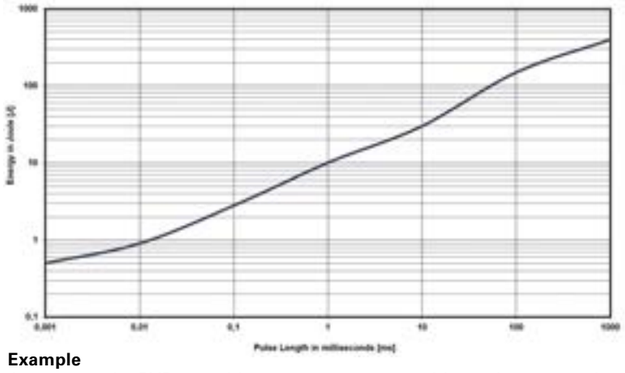

Description of Pulse Energy Curve

- Shape of pulse = e-function
- Time between two pulses = 1 second
- Pulse length = time constant of 1 tau (1 means ... tau = 1ms)

Example
At 1 ms tau the PXP 200 with e.g. 1 Ω to 10 Ω can withstand an energy level of about 10 J, when the pulse pause time is ≥ 1s

At a symmetrical frequency > 1 kHz at pulse length ≥ 10 µsec. the maximum applied pulse energy for PXP 200 is a result out of the nominal power 200 W divided by the operating frequency (at 85°C bottom case) (E = 200 W / F)

Pulse Power Curve (typical rating for PXP 200)

The power curve shows the max. possible power which can be applied for a certain duration.
Referring to the same test procedure as described above.

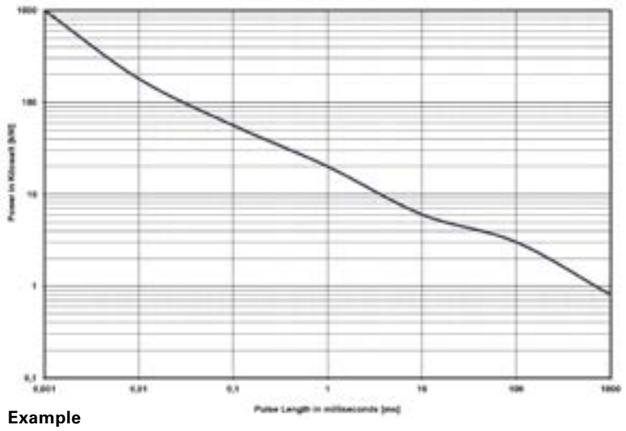

Description of Pulse Power Curve

- Shape of pulse = e-function
- Time between two pulses = 1 second
- Pulse length = time constant of 1 tau (1 means ... tau = 1ms)

Example
For the time-constant of 1 ms you can apply about 20 kW max. (Pp = 2*E / T)→, if the time between two such peaks is ≥ 1s

The above spec. sheet features our standard products. For further options please contact your local Miba Resistors representative.

sales.mra@miba.com · US: sales@mibaresistors.com

Series LPP-250

250 W Power Resistor at 85°C Bottom Case

Miba Resistors general medium power resistor. Main applications are variable speed drives, power supplies, control devices, telecom, robotics, motor controls and other switching designs. Specials and custom designed components on request.

Features

- multiple resistors in 1 package
- Non-Inductive design
- ROHS compliant
- Materials in accordance with UL 94 V-0
- Resistor is also available with preapplied PCM (Phase Change Material) (ask for details)
- Version: fast-on (F) / solder pin (SP) / cable (C) possible (ask for details)

Technical Specifications

Resistance value	on request
Resistance tolerance	±1 % to ±10 %
Temperature coefficient	±250 ppm/°C (at +85°C ref. to +25°C) lower TCR on special request for limited ohmic values
Power rating	up to 250 W at 85°C bottom case temperature (see configurations)
Short time overload	1.25x rated power at 85°C bottom case temperature for 10 sec., ΔR = 0.4% max. (for conf. 1, 2 and 3)
Maximum working voltage	500 V DC **(up to 2,000 V on special request = "S"-version)**
Partial discharge	up to 2,000 Vrms / 80pC (tests only on special request)
Voltage proof	dielectric strength up to 4,000 V DC against ground
Insulation resistance	> 10 GΩ at 1,000 V DC
Isolation voltage betweeen R1 & R2 & R3	500 V DC (1,000 V DC on special request)
Heat resistance to cooling plate	Rth < 0.35 K/W
Capacitance/mass	45 pF (typical), measuring frequency 10 kHz
Serial inductivity	LPP-250 typical 40 nH, measuring frequency 10 kHz
Working temperature range	-55°C to +155°C
Mounting - torque for base plate (static)	1.3 Nm to 1.5 Nm M4 screws
Weight	~23g

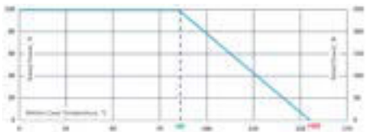

Derating (thermal resist.) LPP-250:
2.86 W/K (0.35 K/W) (for conf. 1, 2 and 3)

Best results can be reached by using a thermal transfer compound with a heat conductivity of at least 1 W/mK. The flatness of the cooling plate must be better than 0.05 mm overall. Surface roughness should not exceed 6.4 µm.

How to make a request

LPP-250-Configuration_Ohmic Value_ Tolerance

For example:
LPP-250-1 4R7 5%

Example for higher working voltage:
LPP-250-1-S 4R7 10%

Dimensions in mm

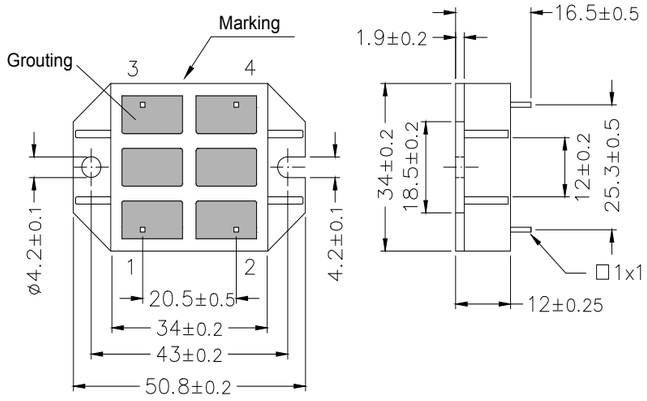

Configurations (P / package)

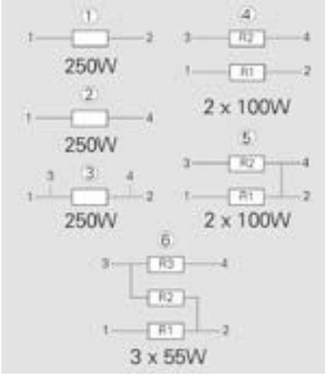

Version 5: ohmic value between contact 2 and 4 aprox. 3mΩ

The above spec. sheet features our standard products. For further options please contact your local Miba Resistors representative
sales.mra@miba.com · US: sales@mibaresistors.com

Series WLL-320

Due to our Non-Inductive design, the WLL series is ideally suited for high-frequency and pulse-loading applications. Through direct mounting on a heat sink, significant cost advantage can be realized. Main applications are: variable speed drives, power supplies, control devices, telecommunications, robotics, motor controls and other switching devices.

Features

- multiple resistors in 1 package
- Non-Inductive design
- ROHS compliant
- Materials in accordance with UL 94 V-0

Technical Specification

Resistance value	0.1 Ω ≤ 1 MΩ
Resistance tolerance	±1 % to ±10 %
Temperature coefficient	> 1R: ±250 ppm/°C (at +85°C ref. to +25°C) lower TCR on special request for limited ohmic values
Power rating	300 W at 25°C bottom case temperature 200 W at 85°C bottom case temperature
Short time overload	1.25x rated power at 85°C bottom case temperature for 10 sec., ΔR = 0.4% max. (for conf. 1, 2 and 3)
Maximum working voltage	500 V **(up to 1,000 V on special request = "S"-version)**
Partial discharge	up to 2,000 Vrms / 80pC (only on special request)
Voltage proof	dielectric strength up to 3,000 V DC against ground
Insulation resistance	> 10 GΩ at 1,000 V DC
Isolation voltage betweeen R1 & R2 & R3	500 V DC (1,000 V DC on special request)
Comparative Tracking Index (CTI)	standard > 600 V
Heat resistance to cooling plate	Rth < 0.35 K/W
Capacitance/mass	45 pF (typical), measuring frequency 10 kHz
Serial inductivity	WLL-320 typical 40 nH, measuring frequency 10 kHz
Working temperature range	-55°C to +155°C
Mounting - torque for base plate (static)	1.3 Nm to 1.5 Nm M4 screws
Weight	~22 g (depending on type)

How to make a request

WLL-320_Ohmic Value_Tolerance

For example:
WLL-320 1R 10%

Configurations (P / package)

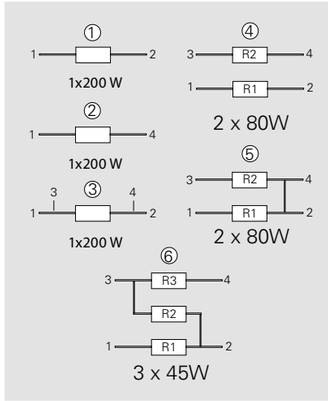

Version 5: ohmic value between contact 2 and 4 aprox. 3mΩ

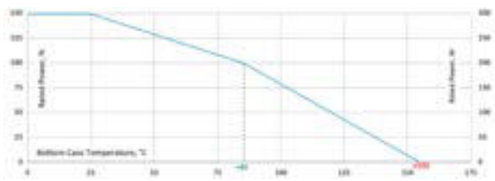

Derating (thermal resist.) WLL-320:
2.86 W/K (0.35 K/W) (for conf. 1, 2 and 3)

Best results can be reached by using a thermal transfer compound with a heat conductivity of at least 1 W/mK. The flatness of the cooling plate must be better than 0.05 mm overall. Surface roughness should not exceed 6.4 µm.

The above spec. sheet features our standard products. For further options please contact your local Miba Resistors representative.
sales.mra@miba.com · US: sales@mibaresistors.com

Series WLL-320

Standard fast-on connection
dimensions in mm [inches]

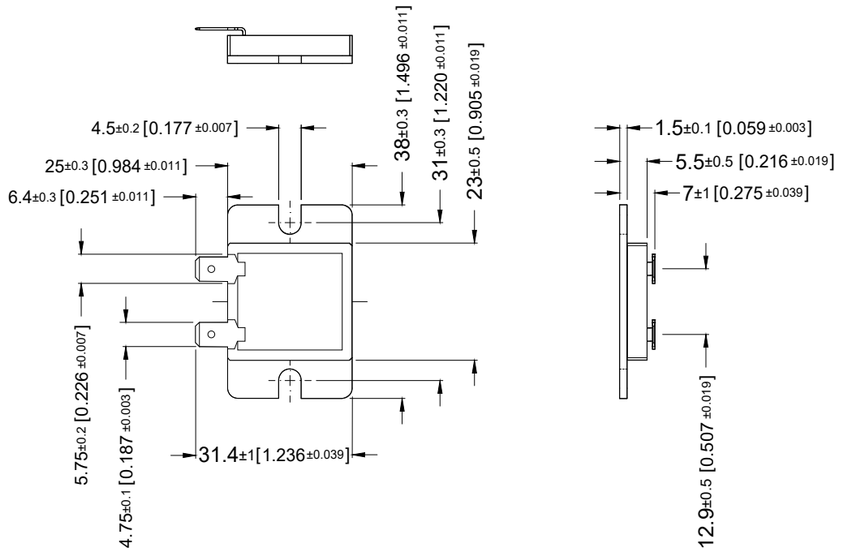

WLL-C (cable connection)
dimensions in mm [inches] only possible for configuration 1

(standard cable length = 100mm, others on special request)

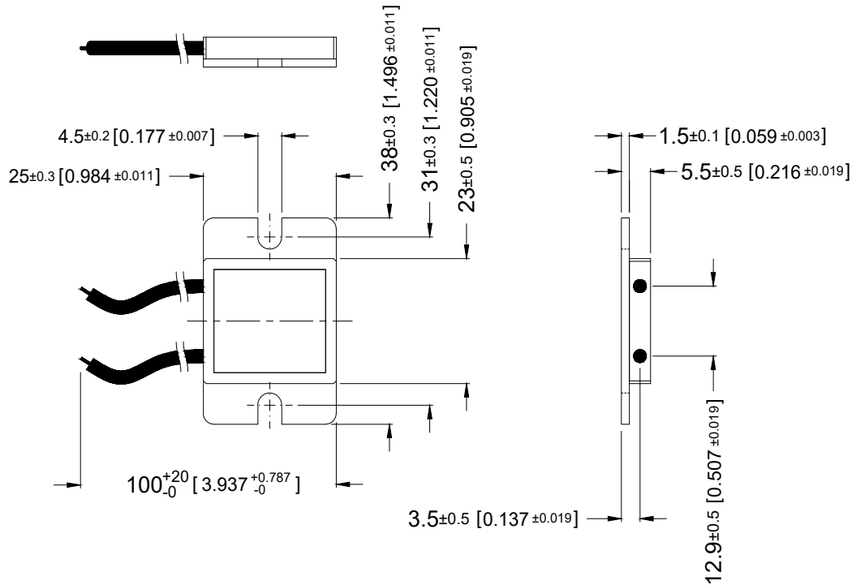

The above spec. sheet features our standard products. For further options please contact your local Miba Resistors representative

sales.mra@miba.com · US: sales@mibaresistors.com

Series ACP-100

100 W resistor

AEC-Q200 qualified

The 100 W resistor is a good solution for small pulses. The proven concept with Fast-On connection offers easy mounting on heat sinks and PCB.

Features

- 100 W power rating at 85°C bottom case temperature
- Non-Inductive design
- ROHS compliant
- Materials in accordance with UL 94 V-0
- Resistor is also available with preapplied PCM (Phase Change Material) (ask for details)

Technical Specifications

Resistance value	0.24 Ω ≤ 1 MΩ
Resistance tolerance	±1 % to ±10 %
Temperature coefficient	≥1 Ω: ±150 ppm/°C (+25°C to +105°C, ref. to +25°C) <1 Ω: ±250 ppm/°C (+25°C to +105°C, ref. to +25°C)
Power rating	100 W at +85°C bottom case temperature
Maximum operating voltage	1000 V DC
Dielectric strength	3500 V DC
Insulation resistance	min. 10 GΩ
Momentary overload	2 times rated power, but no more than 1.5 time max. continuous operating voltage, last 5s, ΔR ≤ ±(0.25%R + 0.001Ω)
Load life	1,000 hours at rated power, BCT at 85°C ΔR ≤ ±(0.5%R + 0.001Ω)
Moisture resistance	56 days / 40°C, RH ≥ 95 %, ΔR ≤ ±(0.5%R + 0.001Ω)
Thermal schock	MIL-Std.-202, method 107, Cond. F ΔR ≤ ±(0.3%R + 0.001Ω)
Terminal strength	MIL-Std.-202, method 211, Cond. A (pull test) 2.4 N ΔR ≤ ±(0.2%R + 0.001Ω)
Vibration, high frequency	MIL-Std.-202, method 204, Cond. D ΔR ≤ ±(0.2%R + 0.001Ω)
Working temperature	-55°C to +125°C
Installation	M3 screw, max. torque 0.7 Nm
Weight	~3,3 g

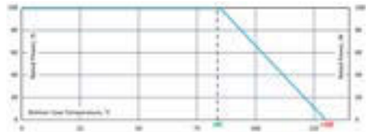

Derating (thermal resist.) ACP-100: 0.45 K/W

A thermal interface material with a specific thermal resistance >3,4W / (mK) and a printed thickness of <0,15mm shall be pre-applied on the resistor.

How to make a request

ACP-100_Ohmic Value_Tolerance

For example:
ACP-100 50R 10%

Dimensions in mm

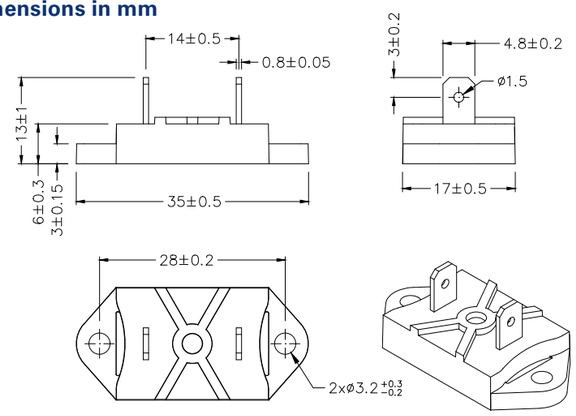

Suggested Mounting Procedure:

1.) Position component and press down by hand
2.) Fix both mounting screws (M3) with 0.1 to 0.2 Nm torque
3.) Apply final torque to mounting screws of 0.6 to 0.7 Nm

The above spec. sheet features our standard products. For further options please contact your local Miba Resistors representative.

sales.mra@miba.com · US: sales@mibaresistors.com

Series RPS-100

Flange Plate Power Resistor

1/1

Features

- 150 W operating power
- Bottom case temperature ≤ 70°C
- Single resistor configuration
- Installation with M4 screw mounting

Technical Specifications

Resistance value	0.1 Ω ≤ 1 MΩ
Resistance tolerance	±1 % to ±10 %
Temperature coefficient	±150 ppm/°C, lower on special request (referenced to 25 °C, ΔR taken at +108°C)
Power rating	150 W at +70°C (installed on heatsink) 10 W at +25°C free air
Maximum operating voltage	2000 V AC or 4000 V DC
Dielectric strength voltage	5 kV AC, 1 min.
Insulation resistance	> 10 GΩ at 500 V DC
Capacitance / mass	45 pF
Contact installation	M4 screw, max. torque 1 Nm
Base plate installation	M4 screw, max. torque 3 Nm
Working temperature	-55°C ~ +155°C
Weight	~65g

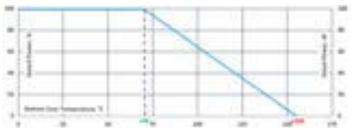

Derating (thermal resist.) RPS-100:
1.76 W/K (0.57 K/W)

How to make a request

RPS-100_Ohmic Value_Tolerance

For example:
RPS-100 220R 5%

Applicable Standard

IEC60115-1: 2001 (GB/T5729-2003)
MIL-STD-202
MIL-R-39009D

Dimensions in mm

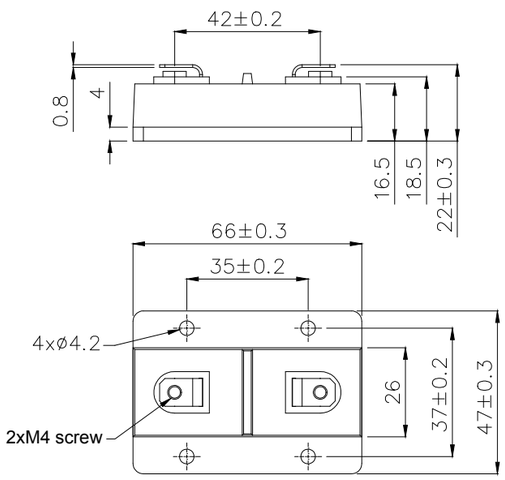

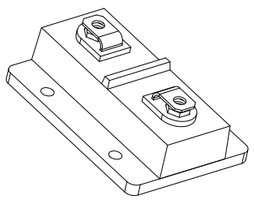

The above spec. sheet features our standard products. For further options please contact your local Miba Resistors representative
sales.mra@miba.com · US: sales@mibaresistors.com

Series AXM

100 W Low Ohm Pulse Power Resistor - only configuration 1 possible

1/1

This model is designed for high pulse withstanding capabilities. The AXM series is usually used in areas where stringent pulse withstanding requirements are common such as welding equipment, variable speed drives and motor control and other switching devices.

Please let us know your exact pulse parameters to offer you the best option / design details.

Features

- 100 W operating power
- Non-Inductive design
- ROHS compliant
- Materials in accordance with UL 94V-0
- Resistor is also available with preapplied PCM (Phase Change Material) (ask for details)

Technical Specifications

Resistance value	0.05 Ω ≤ 0.5 Ω
Resistance tolerance	±10 % standard ± 5 % on special request f. limited ohmic values
Temperature coefficient	typical ±500 ppm/°C (at +85°C ref. to + 25°C)
Power rating	100 W at 85°C bottom case temperature
Maximum working voltage	up to 500 V (depending on pulse load scenario)
Electric strength voltage	3 kV DC (1.5 kV AC, higher values on special request) between terminal and case
Working temperatur range	-55°C to +155°C
Standard wire length	L = 10 mm (other lengths available on special request)
Mounting - torque	1.0 Nm to 1.2 Nm
Weight	~18 g

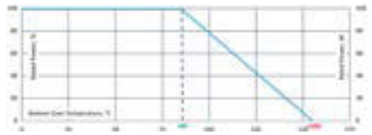

Best results can be reached by using a thermal transfer compound with a heat conductivity of at least 1 W/mK. The flatness of the cooling plate must be better than 0.05 mm overall. Surface roughness should not exceed 6.4 µm.

How to make a request

AXM-1 B_Ohmic Value_Tolerance

For example:
AXM-1 B 0R1 10%

Suggested Mounting Procedure:

1.) Position component and press down by hand
2.) Fix both mounting screws (M4) with 0.1 to 0.2 Nm torque
3.) Apply final torque to mounting screws of 1.0 to 1.2 Nm

Dimensions in mm [inches]

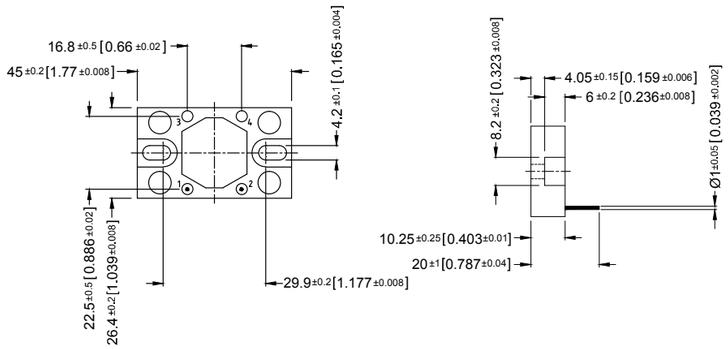

Boreholes distance from min. 30.0 mm to max. 37.0 mm

Configuration

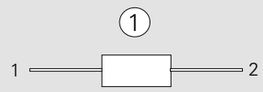

100W

Only configuration 1 possible

The above spec. sheet features our standard products. For further options please contact your local Miba Resistors representative.
sales.mra@miba.com · US: sales@mibaresistors.com

Ultra-High-Power Resistors

UXP®-350
UXP®-600
UXP®-800
UXP®-2000
UPT®-400
UPT®-600
UPT®-800
UPT®-2000
ULX®-600
ULX®-800
ULX®-2000
UXM-400

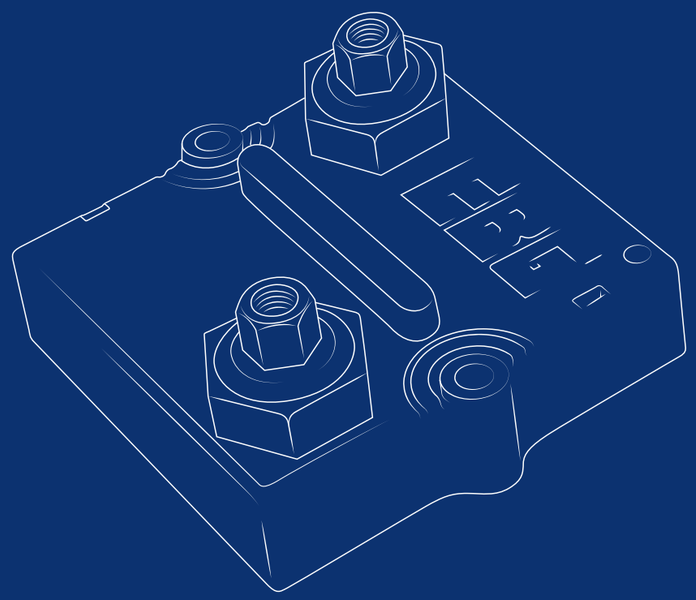

Series UXP®-350 (replaces the previous UXP-300)

350 W resistor

Mainly used as a snubber resistor to compensate the C-R peaks in traction power supplies. Furthermore for speed drives, power supplies, control devices and robotics.
The easy mounting fixture guarantees an auto-calibrated pressure to the cooling plate of about 300 N.

Features

- 350 W operating power
- Non-Inductive design
- ROHS compliant
- High insulation & partial discharge performance
- Materials in accordance with UL 94 V-0
- Resistor is also available with preapplied PCM (Phase Change Material) (ask for details)

Technical Specifications

Resistance value	≥0.03 Ω ≤ 1 MΩ (higher values on request)
Resistance tolerance	±5 % to ±10 % ±1 % to ±2 % on special request for limited ohmic values with the reduction of the max. power / pulse rating (ask for details)
Temperature coefficient	±500 ppm/°C (0.1 Ω ≤ 0.12 Ω) standard ±150 ppm/°C (> 0.12 Ω ≤ 1 MΩ) standard lower TCR on special request for limited ohmic values
Power rating	350 W at 85°C bottom case temperature
Short time overload	600 W at 70°C for 10sec., ΔR = 0.4% max.
Maximum working voltage	5,000 V DC ≙ 3.500 V AC RMS (50 Hz) higher voltage on request, not exceeding max. power
Maximum continuous current	150 A (HC or UHC version)
Electric strength voltage	7 kVrms / 50 Hz / 500 VA, test time 1 min. between terminal und case (up to 12 kVrms on request) voltages above 10 kVrms are tested at DC equivalent to avoid pre damage of component
Partial discharge	4 kVrms < 10 pC (up to 7 kVrms < 10 pC on request) acc. to IEC 60270
Peak current	up to 1,500 A depending on pulse length and frequency (ask for details)
Insulation resistance	> 10 GΩ at 1,000 V
Single shot voltage	up to 12 kV norm wave (1.5/50 µsec)
Creeping distance	> 42 mm (standard, higher on request)
Air distance	> 14 mm (standard, higher on request)
Inductance	≤ 80 nH (typical), measuring frequency 10 kHz
Capacity/mass	≤ 110 pF (typical), measuring frequency 10 kHz
Capacity/parallel	≤ 40 pF (typical), measuring frequency 10 kHz
Operating temperature	-55°C to +155°C
Mounting - torque for contacts	1.8 Nm to 2 Nm
Mounting - torque	1.6 Nm to 1.8 Nm M4 screws
Internal temperature sensor available on request	PT-1000 / PT-100 / Type K / Type J (ask for details)
Cable variation available on request	HV-cable / Flying leads (ask for details)
Standard cable type	H&S Radox 9 GKW AX 1,5mm² (other cable types on special request)
Weight	~120 g

General Specifications

Electric support
Alumina ceramic metalized with Miba Resistors ALTOX film on the bottom for improved heat transfer and optimum discharge

Encapsulation
Resin-filled epoxy casing with large creeping distance to mass, large air distance between the terminals and high insulation resistance (CTI 600)

Resistance Element
Special design for perfect current yield over the entire resistor area

Housing
Housings are made without color additives. The color definition is natural and can vary in different pigmentation

Contacts
- Easy load connection with M4 and M5 screws (Inch thread terminals on request)
- Connector height available from 25 to 42 mm
- Various sleeves for increasing creeping distance up to 85 mm or potted cable connections are available on request
- Contacts standard M5 (M4 on special request - connection screw thread max. 7 mm

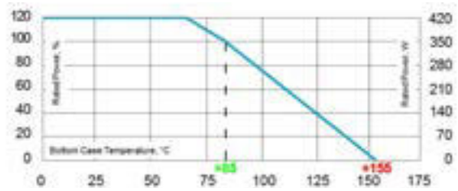

Derating (thermal resist.) UXP®-350: 5 W/K (0.2 K/W)
Power rating: 350 W at 85°C bottom case temperature*
Please ask for detailed mounting procedure!

* This value is only applicable when using a thermal conduction to the heat sink Rth-cs<0.025 K/W. This value can be obtained by using a thermal transfer compound with a heat conductivity of at least 1 W/mK. The flatness of the cooling plate must be better than 0.05 mm overall. Surface roughness should not exceed 6.4 µm.

The above spec. sheet features our standard products. For further options please contact your local Miba Resistors representative.

sales.mra@miba.com · US: sales@mibaresistors.com

Series UXP®-350

Dimensions in inches [mm]

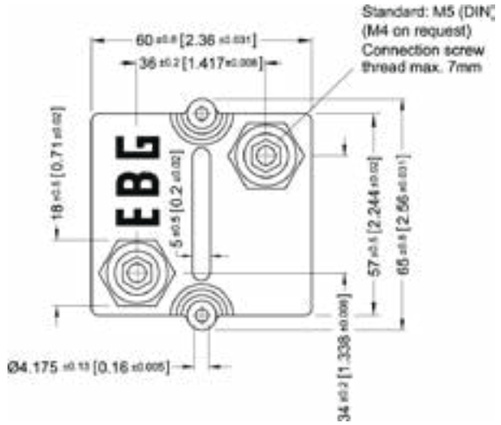

How to make a request

- **Standard terminal**
  UXP-350_Ohmic Value_Tolerance_Terminal Height_Contact

  For example
  UXP-350 5R 10% 30/32 M5

- **Examples for optional terminals**
  UXP-350 5R 10% 25/25 M5 or UXP-350-7 5R 10%

Borehole Distance

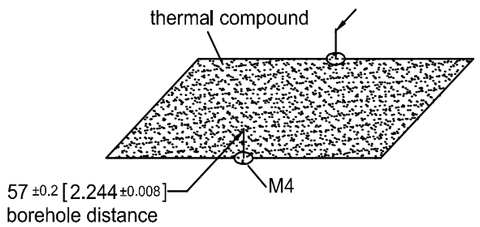

Standard Terminals

Air distance: 14mm [0.5512] min.
Creeping distance: 42mm [1.6535] min.

Terminal height 30/32
Standard

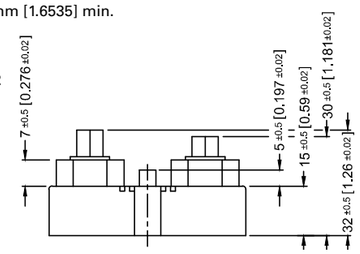

Terminal height 25/25
Optional

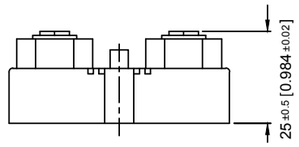

Terminal Options (for increased air & creeping distances)

Other terminal dimensions available, contact for more information

UXP-350-9
Air distance: 25mm [0.984] min.
Creeping distance: 83mm [3.267] min.

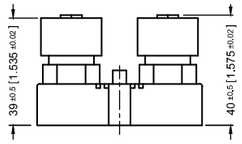

UXP-350-7
Air distance: 26.7mm [1.0512] min.
Creeping distance: 50mm [1.968] min.

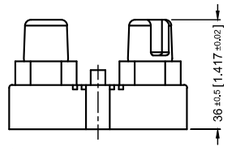

UXP-350-8
Air and creeping distance
depends on length of HV-cable

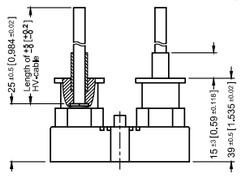

Test Specifications*

Test	Method	Tolerance Drift**
Short time overload	600 W/10sec.	0.40%
Humidity steady state	56 days/40°C/95%	0.25%
Temp. Cycling	-55/+125/5cycles	0.20%
Shock	40g/4,000 times	0.25%
Vibrations	2-500Hz/10g	0.25%
Load life 3,000cyl	PN 30 min. on / 30 min off	0.40%
Terminal strengths	200 N for hexa. thread contacts	0.05%

* The test methods are according to IEC 60068-2

** The tolerance drift is the possible change of the resistance value because of the certain test

Please note most all of our UXP customers have their own custom designed drawing. Therefore please do not hesitate to discuss your special needs with the local representative or contact us directly.

The above spec. sheet features our standard products. For further options please contact your local Miba Resistors representative
sales.mra@miba.com · US: sales@mibaresistors.com

Series UXP®-350

Pulse Energy Curve (typical rating for UXP-350 with 2R and 10 % tolerance)

Note: These energy values are reference values, depending on ohmic value and used resistive paste, a variation in max. energy load capability is possible

Test procedure

Every test resistor was mounted with thermal compound (0.9 W/mK) on a water cooled heatsink

- Constant inlet water temperature: +50°C
- The test time of each tested resistor: 10min.
- Break time between two pulses: 1sec.
- To determine good / defect parts the ohmic value was measured before and after tests: a change of tolerance of more than 0.1% means defect

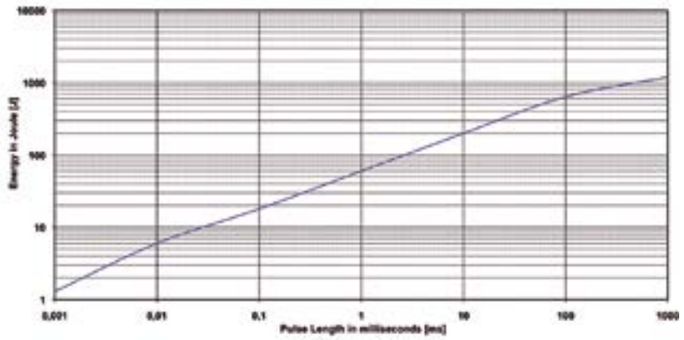

Description of Pulse Energy Curve

- Shape of pulse = e-function
- Time between two pulses = 1 second
- Pulse length = time constant of 1 tau (1 means ... tau = 1ms)

Example
At 1 ms tau the UXP-350 with 2R can withstand an energy level of about 60 J, when the pulse pause time is ≥ 1s

At a symmetrical frequency > 1 kHz at pulse length ≥ 10 µsec. the maximum applied pulse energy for UXP-350 is a result out of the nominal power 350 W divided by the operating frequency (at 85°C bottom case) (E = 350 W / F)

Pulse Power Curve (typical rating for UXP-350 with 2R and 10 % tolerance)

The power curve shows the max. possible power which can be applied for a certain duration.
Referring to the same test procedure as described above.

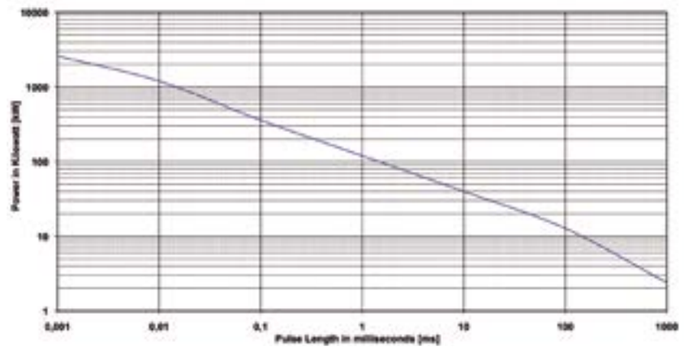

Description of Pulse Power Curve

- Shape of pulse = e-function
- Time between two pulses = 1 second
- Pulse length = time constant of 1 tau (1 means ... tau = 1ms)

Example
For the time-constant of 1 ms you can apply about 120 kW max. (Pp = 2*E / T)→, if the time between two such peaks is ≥ 1s

The above spec. sheet features our standard products. For further options please contact your local Miba Resistors representative.
sales.mra@miba.com · US: sales@mibaresistors.com

Series UXP®-600

600 W resistor, US Patent-No. 5,355,281

For variable speed drives, power supplies, control devices, robotics, motor control and other power designs, the easy mounting fixture assures an auto-calibrated pressure to the cooling plate of about 300 N.

Features

- 600 W operating power
- Non-Inductive design
- ROHS compliant
- High insulation & partial discharge performance
- Materials in accordance with UL 94 V-0
- Resistor is also available with preapplied PCM (Phase Change Material) (ask for details)

Technical Specifications

Resistance value	≥0.03 Ω ≤ 1.5 MΩ (higher values on request)
Resistance tolerance	±5 % to ±10 % ±1 % to ±2 % on special request for limited ohmic values with the reduction of the max. power / pulse rating (ask for details)
Temperature coefficient	±500 ppm/°C (0.1 Ω ≤ 0.2 Ω) standard ±150 ppm/°C (> 0.2 Ω ≤ 1.5 MΩ) standard lower TCR on special request for limited ohmic values
Power rating	600 W at 85°C bottom case temperature
Short time overload	1,000 W at 70°C for 10sec., ΔR = 0.4% max.
Maximum working voltage	5,000 V DC ≙ 3.500 V AC RMS (50 Hz) higher voltage on request, not exceeding max. power
Maximum continuous current	150 A (HC or UHC version)
Electric strength voltage	7 kVrms / 50 Hz / 500 VA, test time 1 min. between terminal und case (up to 12 kVrms on request) voltages above 10 kVrms are tested at DC equivalent to avoid pre damage of component
Partial discharge	4 kVrms < 10 pC (up to 7 kVrms < 10 pC on request) acc. to IEC 60270
Peak current	up to 1,500 A depending on pulse length and frequency (ask for details)
Insulation resistance	> 10 GΩ at 1,000 V
Single shot voltage	up to 12 kV norm wave (1.5/50 µsec)
Creeping distance	> 42mm (standard, higher on request)
Air distance	> 14mm (standard, higher on request)
Inductance	≤ 80 nH (typical), measuring frequency 10 kHz
Capacity/mass	≤ 110 pF (typical), measuring frequency 10 kHz
Capacity/parallel	≤ 40 pF (typical), measuring frequency 10 kHz
Operating temperature	-55°C to +155°C
Mounting - torque for contacts	1.8 Nm to 2 Nm
Mounting - torque	1.6 Nm to 1.8 Nm M4 screws
Internal temperature sensor available on request	PT-1000 / PT-100 / Type K / Type J (ask for details)
Cable variation available on request	HV-cable / Flying leads (ask for details)
Standard cable Type	H&S Radox 9 GKW AX 1,5mm² (other cable types on special request)
Weight	~120 g

General Specifications

Electric support
Alumina ceramic metalized with Miba Resistors ALTOX film on the bottom for improved heat transfer and optimum discharge

Encapsulation
Resin-filled epoxy casing with large creeping distance to mass, large air distance between the terminals and high insulation resistance (CTI 600)

Resistance Element
Special design for low inductance and capacitance values. The element employs our special METOXFILM, which demonstrates stability while covering high wattage and pulse loading

Housing
Housings are made without color additives. The color definition is natural and can vary in different pigmentation

Contacts
- Easy load connection with M4 and M5 screws (Inch thread terminals on request)
- Connector height available from 25 to 42 mm
- Various sleeves for increasing creeping distance up to 85 mm or potted cable connections are available on request
- Contacts standard M5 (M4 on special request - connection screw thread max. 7 mm

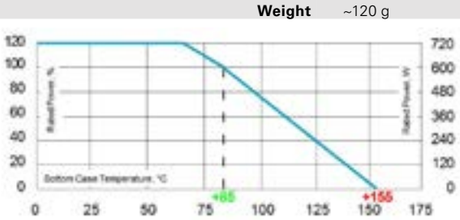

Derating (thermal resist.) UXP®-600: 8.33 W/K (0.12 K/W)
Power rating: 600 W at 85°C bottom case temperature*
Please ask for detailed mounting procedure!

* This value is only applicable when using a thermal conduction to the heat sink Rth-cs<0.025 K/W. This value can be obtained by using a thermal transfer compound with a heat conductivity of at least 1 W/mK. The flatness of the cooling plate must be better than 0.05 mm overall. Surface roughness should not exceed 6.4 µm.

The above spec. sheet features our standard products. For further options please contact your local Miba Resistors representative

sales.mra@miba.com · US: sales@mibaresistors.com

Series UXP®-600

Dimensions in mm [inches]

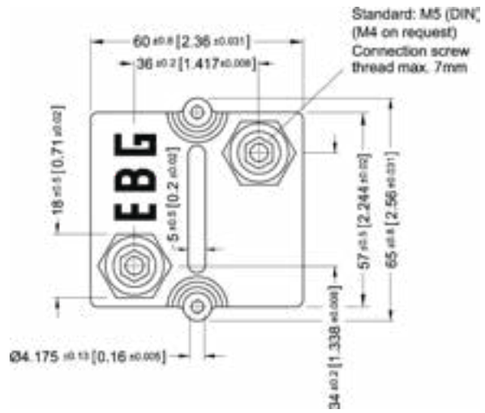

How to make a request

- **Standard terminal**
  UXP-600_Ohmic Value_Tolerance_Terminal Height_Contact

  For example
  UXP-600 5R 10% 30/32 M5

- **Examples for optional terminals**
  UXP-600 5R 10% 25/25 M5 or UXP-600-7 5R 10%

Borehole Distance

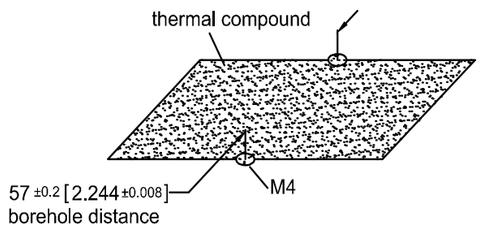

Standard Terminals

Air distance: 14mm [0.5512] min.
Creeping distance: 42mm [1.6535] min.

Terminal height 30/32
Standard

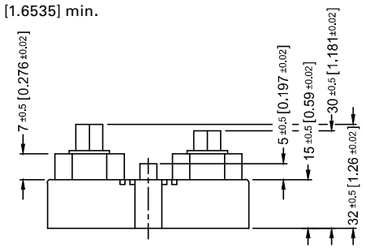

Terminal height 25/25
Optional

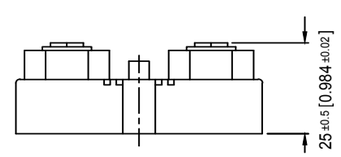

Terminal Options (for increased air & creeping distances)

Other terminal dimensions available, contact for more information

UXP-600-9
Air distance: 25mm [0.984] min.
Creeping distance: 83mm [3.267] min.

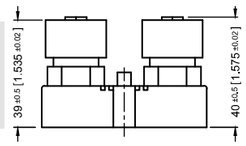

UXP-600-7
Air distance: 26.7mm [1.0512] min.
Creeping distance: 50mm [1.968] min.

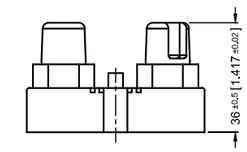

UXP-600-8
Air and creeping distance depends on length of HV-cable

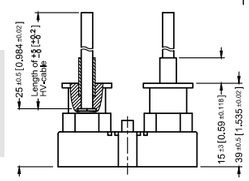

Test Specifications*

Test	Method	Tolerance Drift**
Short time overload	1,000 W/10sec.	0.40%
Humidity steady state	56 days/40°C/95%	0.25%
Temp. Cycling	-55/+125/5cycles	0.20%
Shock	40g/4,000 times	0.25%
Vibrations	2-500Hz/10g	0.25%
Load life 3,000cyl	PN 30 min. on / 30 min off	0.40%
Terminal strengths	200 N for hexa. thread contacts	0.05%

* The test methods are according to IEC 60068-2

** The tolerance drift is the possible change of the resistance value because of the certain test

Please note most all of our UXP customers have their own custom designed drawing. Therefore please do not hesitate to discuss your special needs with the local representative or contact us directly.

The above spec. sheet features our standard products. For further options please contact your local Miba Resistors representative.

sales.mra@miba.com · US: sales@mibaresistors.com

Series UXP®-600

Pulse Energy Curve (typical rating for UXP-600 with 10R and 10 % tolerance)

Note: These energy values are reference values, depending on ohmic value and used resistive paste, a variation in max. energy load capability is possible

Test procedure

Every test resistor was mounted with thermal compound (0.9 W/mK) on a water cooled heatsink

- Constant inlet water temperature: +50°C
- The test time of each tested resistor: 10min.
- Break time between two pulses: 1sec.
- To determine good / defect parts the ohmic value was measured before and after tests: a change of tolerance of more than 0.1% means defect

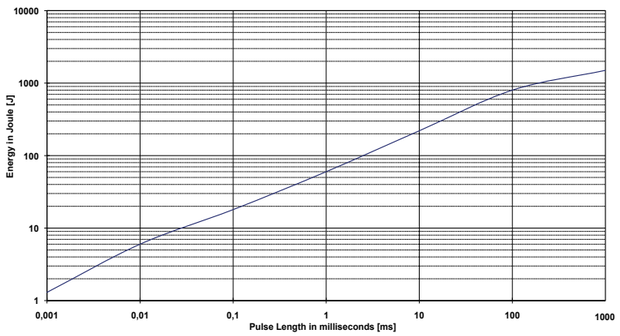

Description of Pulse Energy Curve

- Shape of pulse = e-function
- Time between two pulses = 1 second
- Pulse length = time constant of 1 tau (1 means ... tau = 1ms)

Example

At 1 ms tau the UXP-600 with 10R can withstand an energy level of about 60 J, when the pulse pause time is ≥ 1s

At a symmetrical frequency > 1 kHz at pulse length ≥ 10 µsec. the maximum applied pulse energy for UXP-600 is a result out of the nominal power 600 W divided by the operating frequency (at 85°C bottom case) (E = 600 W / F)

Pulse Power Curve (typical rating for UXP-600 with 10R and 10 % tolerance)

The power curve shows the max. possible power which can be applied for a certain duration.
Referring to the same test procedure as described above.

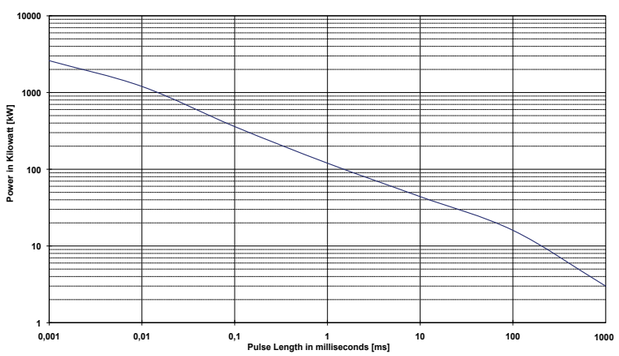

Description of Pulse Power Curve

- Shape of pulse = e-function
- Time between two pulses = 1 second
- Pulse length = time constant of 1 tau (1 means ... tau = 1ms)

Example

For the time-constant of 1 ms you can apply about 120 kW max. (Pp = 2*E / T)→, if the time between two such peaks is ≥ 1s

The above spec. sheet features our standard products. For further options please contact your local Miba Resistors representative

sales.mra@miba.com · US: sales@mibaresistors.com

Series UXP®-800

800 W resistor, US Patent-No. 5,355,281

For variable speed drives, power supplies, control devices, robotics, motor control and other power designs, the easy mounting fixture assures an auto-calibrated pressure to the cooling plate of about 300 N.

Features

- 800 W operating power
- Non-Inductive design
- ROHS compliant
- High insulation & partial discharge performance
- Materials in accordance with UL 94 V-0
- Resistor is also available with preapplied PCM (Phase Change Material) (ask for details)

Technical Specifications

Resistance value	≥0.03 Ω ≤ 1 MΩ (higher values on request)
Resistance tolerance	±5 % to ±10 % ±1 % to ±2 % on special request for limited ohmic values with the reduction of the max. power / pulse rating (ask for details)
Temperature coefficient	±500 ppm/°C (0.1 Ω ≤ 0.25Ω) standard ±150 ppm/°C (> 0.25 Ω ≤ 1 MΩ) standard lower TCR on special request for limited ohmic values
Power rating	800 W at 85°C bottom case temperature
Short time overload	1,000 W at 70°C for 10sec., ΔR = 0.4% max.
Maximum working voltage	5,000 V DC ≙ 3.500 V AC RMS (50 Hz) higher voltage on request, not exceeding max. power
Maximum continuous current	150 A (HC or UHC version)
Electric strength voltage	7 kVrms / 50 Hz / 500 VA, test time 1 min. between terminal und case (up to 12 kVrms on request) voltages above 10 kVrms are tested at DC equivalent to avoid pre damage of component
Partial discharge	4 kVrms < 10 pC (up to 7 kVrms < 10 pC on request) acc. to IEC 60270
Peak current	up to 1,500 A depending on pulse length and frequency (ask for details)
Insulation resistance	> 10 GΩ at 1,000 V
Single shot voltage	up to 12 kV norm wave (1.5/50 µsec)
Creeping distance	> 42 mm (standard, higher on request)
Air distance	> 14 mm (standard, higher on request)
Inductance	≤ 80 nH (typical), measuring frequency 10 kHz
Capacity/mass	≤ 140 pF (typical), measuring frequency 10 kHz
Capacity/parallel	≤ 40 pF (typical), measuring frequency 10 kHz
Operating temperature	-55°C to +155°C
Mounting - torque for contacts	1.8 Nm to 2 Nm
Mounting - torque	1.6 Nm to 1.8 Nm M4 screws
Internal temperature sensor available on request	PT-1000 / PT-100 / Type K / Type J (ask for details)
Cable variation available on request	HV-cable / Flying leads (ask for details)
Standard cable type	H&S Radox 9 GKW AX 1,5mm² (other cable types on special request)
Weight	~120 g

General Specifications

Electric support
Alumina ceramic metalized with Miba Resistors ALTOX film on the bottom for improved heat transfer and optimum discharge

Encapsulation
Resin-filled epoxy casing with large creeping distance to mass, large air distance between the terminals and high insulation resistance (CTI 600)

Resistance Element
Special design for low inductance and capacitance values. The element employs our special METOXFILM, which demonstrates stability while covering high wattage and pulse loading

Housing
Housings are made without color additives. The color definition is natural and can vary in different pigmentation

Contacts
- Easy load connection with M4 and M5 screws (Inch thread terminals on request)
- Connector height available from 25 to 42 mm
- Various sleeves for increasing creeping distance up to 85 mm or potted cable connections are available on request
- Contacts standard M5 (M4 on special request - connection screw thread max. 7 mm

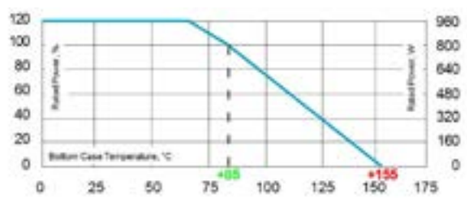

Derating (thermal resist.) UXP®-800: 9.09 W/K (0.11 K/W)
Power rating: 800 W at 85°C bottom case temperature*
Please ask for detailed mounting procedure!

* This value is only applicable when using a thermal conduction to the heat sink Rth-cs<0.025 K/W. This value can be obtained by using a thermal transfer compound with a heat conductivity of at least 1 W/mK. The flatness of the cooling plate must be better than 0.05 mm overall. Surface roughness should not exceed 6.4 µm.

The above spec. sheet features our standard products. For further options please contact your local Miba Resistors representative.

sales.mra@miba.com · US: sales@mibaresistors.com

Series UXP®-800

Dimensions in mm [inches]

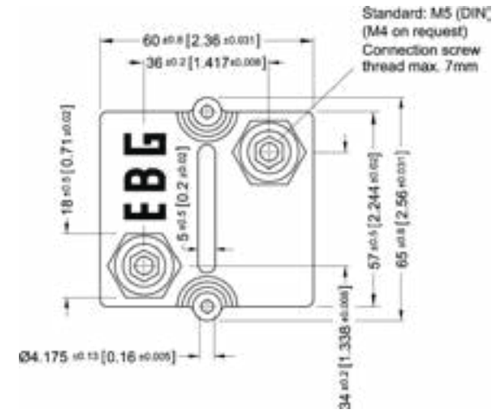

How to make a request

- **Standard terminal**
  UXP-800_Ohmic Value_Tolerance_Terminal Height_Contact

  For example
  UXP-800 5R 10% 30/32 M5

- **Examples for optional terminals**
  UXP-800 5R 10% 25/25 M5 or UXP-800-7 5R 10%

Borehole Distance

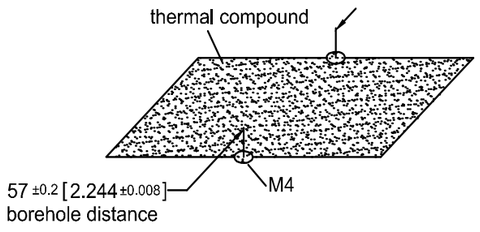

Standard Terminals

Air distance: 14mm [0.5512] min.
Creeping distance: 42mm [1.6535] min.

Terminal height 30/32
Standard

Terminal height 25/25
Optional

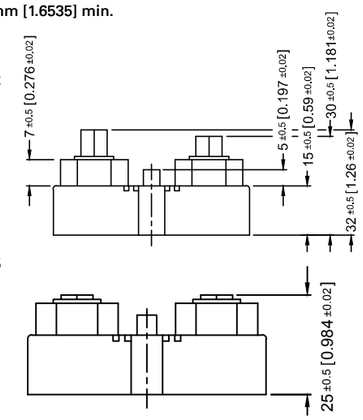

Terminal Options (for increased air & creeping distances)

Other terminal dimensions available, contact for more information

UXP-800-9
Air distance: 25mm [0.984] min.
Creeping distance: 83mm [3.267] min.

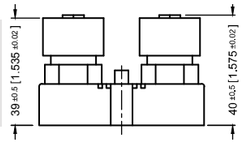

UXP-800-7
Air distance: 26.7mm [1.0512] min.
Creeping distance: 50mm [1.968] min.

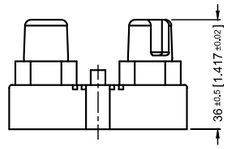

UXP-800-8
Air and creeping distance
depends on length of HV-cable

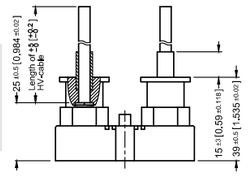

Test Specifications*

Test	Method	Tolerance Drift**
Short time overload	1,000 W/10sec.	0.40%
Humidity steady state	56 days/40°C/95%	0.25%
Temp. Cycling	-55/+125/5cycles	0.20%
Shock	40g/4,000 times	0.25%
Vibrations	2-500Hz/10g	0.25%
Load life 3,000cyl	PN 30 min. on / 30 min off	0.40%
Terminal strengths	200 N for hexa. thread contacts	0.05%

* The test methods are according to IEC 60068-2

** The tolerance drift is the possible change of the resistance value because of the certain test

Please note most all of our UXP customers have their own custom designed drawing. Therefore please do not hesitate to discuss your special needs with the local representative or contact us directly.

The above spec. sheet features our standard products. For further options please contact your local Miba Resistors representative
sales.mra@miba.com · US: sales@mibaresistors.com

Series UXP®-800

Pulse Energy Curve (typical rating for UXP-800 with 2R and 10 % tolerance)

Note: These energy values are reference values, depending on ohmic value and used resistive paste, a variation in max. energy load capability is possible

Test procedure

Every test resistor was mounted with thermal compound (0.9 W/mK) on a water cooled heatsink

- Constant inlet water temperature: +50°C
- The test time of each tested resistor: 10min.
- Break time between two pulses: 1sec.
- To determine good / defect parts the ohmic value was measured before and after tests: a change of tolerance of more than 0.1% means defect

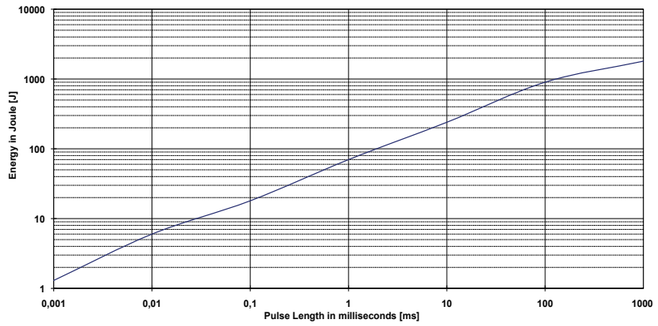

Description of Pulse Energy Curve

- Shape of pulse = e-function
- Time between two pulses = 1 second
- Pulse length = time constant of 1 tau (1 means ... tau = 1ms)

Example

At 1 ms tau the UXP-800 with 2R can withstand an energy level of about 70 J, when the pulse pause time is ≥ 1s

At a symmetrical frequency > 1 kHz at pulse length ≥ 10 µsec. the maximum applied pulse energy for UXP-800 is a result out of the nominal power 800 W divided by the operating frequency (at 85°C bottom case) (E = 800 W / F)

Pulse Power Curve (typical rating for UXP-800 with 2R and 10 % tolerance)

The power curve shows the max. possible power which can be applied for a certain duration.
Referring to the same test procedure as described above.

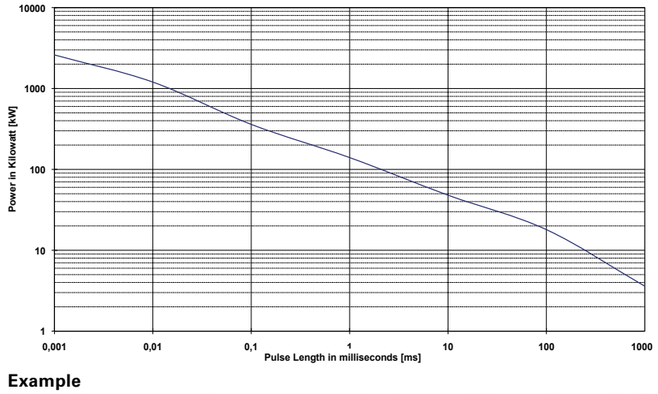

Description of Pulse Power Curve

- Shape of pulse = e-function
- Time between two pulses = 1 second
- Pulse length = time constant of 1 tau (1 means ... tau = 1ms)

Example

For the time-constant of 1 ms you can apply about 140 kW max. (Pp = 2*E / T)→, if the time between two such peaks is ≥ 1s

The above spec. sheet features our standard products. For further options please contact your local Miba Resistors representative.
sales.mra@miba.com · US: sales@mibaresistors.com

Series UXP®-2000

2,000 W resistor at 125°C bottom case

For variable speed drives, power supplies, control devices, robotics, motor control and other power designs, the easy mounting fixture assures an auto-calibrated pressure to the cooling plate of about 300 N.

Features

- 2,000 W operating power
- Non-Inductive design
- ROHS compliant
- High insulation & partial discharge performance
- Materials in accordance with UL 94 V-0
- Resistor is also available with preapplied PCM (Phase Change Material) (ask for details)

Technical Specifications

Resistance value	≥0.1 Ω ≤ 6 KΩ (higher values on request)
Resistance tolerance	±5 % to ±10 %
Temperature coefficient	±250 ppm/°C standard lower TCR on special request for limited ohmic values
Power rating	2,000 W at 125°C bottom case temperature resp. 60°C heat sink temperature
Short time overload	2,400 W at 70°C for 10sec., ΔR = 0.4% max.
Maximum working voltage	5,000 V DC ≙ 3.500 V AC RMS (50 Hz) higher voltage on request, not exceeding max. power
Maximum continuous current	150 A (HC or UHC version)
Electric strength voltage	7 kVrms / 50 Hz / 500 VA, test time 1 min. between terminal und case (up to 12 kVrms on request) voltages above 10 kVrms are tested at DC equivalent to avoid pre damage of component
Partial discharge	4 kVrms < 10 pC (up to 7 kVrms < 10 pC on request) acc. to IEC 60270
Pulse peak current	up to 1,500 A depending on pulse length and frequency (ask for details)
Insulation resistance	> 10 GΩ at 1,000 V
Single shot voltage	up to 12 kV norm wave (1.5/50 µsec)
Creeping distance	> 42 mm (standard, higher on request)
Air distance	> 14 mm (standard, higher on request)
Inductance	≤ 80 nH (typical), measuring frequency 10 kHz
Capacity/mass	≤ 120 pF (typical), measuring frequency 10 kHz
Capacity/parallel	≤ 40 pF (typical), measuring frequency 10 kHz
Operating temperature	-55°C to +155°C
Mounting - torque for contacts	1.8 Nm to 2 Nm
Mounting - torque	1.6 Nm to 1.8 Nm M4 screws
Internal temperature sensor available on request	PT-1000 / PT-100 / Type K / Type J (ask for details)
Cable variation available on request	HV-cable / Flying leads (ask for details)
Standard cable type	H&S Radox 9 GKW AX 1,5mm² (other cable types on special request)
Suggested storage condition	in dark ambient at > 0°C to + 85°C; max. 80%rel. humidity for 12 months -> DO NOT remove the resistor from the original packing until you are ready to mount
Weight	~100 g

General Specifications

Electric support
Alumina ceramic metalized with Miba Resistors ALTOX film on the bottom for improved heat transfer and optimum discharge

Encapsulation
Resin-filled epoxy casing with large creeping distance to mass, large air distance between the terminals and high insulation resistance (CTI 600)

Resistance Element
Special design for low inductance and capacitance values. The element employs our special METOXFILM, which demonstrates stability while covering high wattage and pulse loading

Housing
Housings are made without color additives. The color definition is natural and can vary in different pigmentation

Contacts
- Easy load connection with M4 and M5 screws (Inch thread terminals on request)
- Connector height available from 25 to 42 mm
- Various sleeves for increasing creeping distance up to 85 mm or potted cable connections are available on request
- Contacts standard M5 (M4 on special request - connection screw thread max. 7 mm

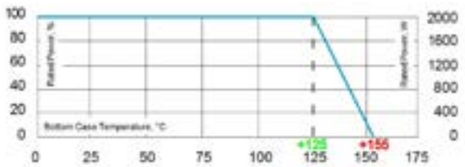

Derating (thermal resist.) UXP®-2000: 66.6 W/K (0.015 K/W)
Power rating: 2,000 W at 125°C bottom case temperature*
Please ask for detailed mounting procedure!

* Best results can be reached by using a thermal transfer compound with a heat conductivity of at least 2.9 W/mk. The flatness of the cooling plate must be better than 0.05 mm overall. Surface roughness should not exceed 6.4 µm.

The above spec. sheet features our standard products. For further options please contact your local Miba Resistors representative
sales.mra@miba.com · US: sales@mibaresistors.com

Series UXP®-2000

Dimensions in mm [inches]

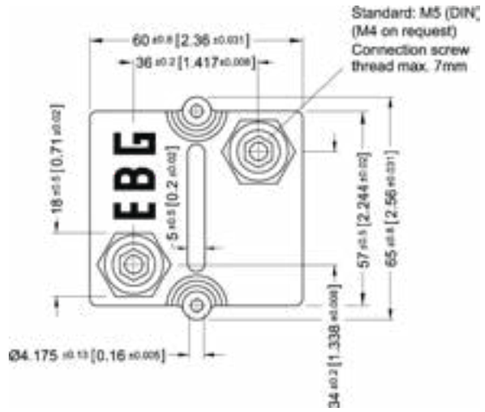

How to make a request

- **Standard terminal**
  UXP-2000_Ohmic Value_Tolerance_Terminal Height_Contact

  For example
  UXP-2000 10R 10% 30/32 M5

- **Examples for optional terminals**
  UXP-2000 24R 10% 25/25 M5

Borehole Distance

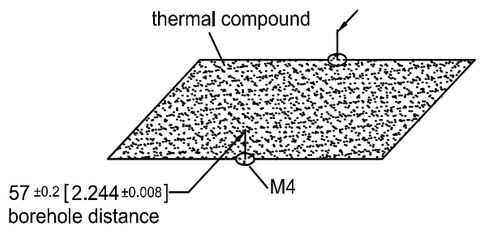

Standard Terminals

Air distance: 14mm [0.5512] min.
Creeping distance: 42mm [1.6535] min.

Terminal height 30/32
Standard

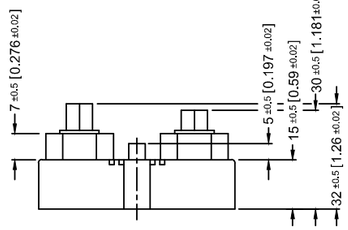

Terminal height 25/25
Optional

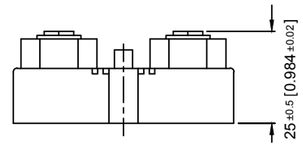

Terminal Options (for increased air & creeping distances)

Other terminal dimensions available, contact for more information

UXP-2000-9
Air distance: 25mm [0.984] min.
Creeping distance: 83mm [3.267] min.

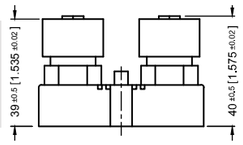

UXP-2000-7
Air distance: 26.7mm [1.0512] min.
Creeping distance: 50mm [1.968] min.

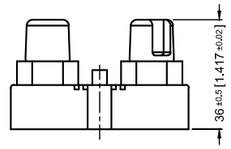

UXP-2000-8
Air and creeping distance depends on length of HV-cable

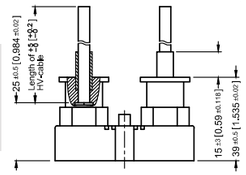

Test Specifications*

Test	Method	Tolerance Drift**
Short time overload	2,400 W/10sec.	0.40%
Humidity steady state	56 days/40°C/95%	0.25%
Temp. Cycling	-55/+125/5cycles	0.20%
Shock	40g/4,000 times	0.25%
Vibrations	2-500Hz/10g	0.25%
Load life 3,000cyl	PN 30 min. on / 30 min off	0.40%
Terminal strengths	200 N for hexa. thread contacts	0.05%

* The test methods are according to IEC 60068-2

** The tolerance drift is the possible change of the resistance value because of the certain test

Please note most all of our UXP customers have their own custom designed drawing. Therefore please do not hesitate to discuss your special needs with the local representative or contact us directly.

The above spec. sheet features our standard products. For further options please contact your local Miba Resistors representative.
sales.mra@miba.com · US: sales@mibaresistors.com

Ultra-High-Power Resistors

Series UPT®-400

400 W resistor, US Patent-No. 5,355,281

1/1

For variable speed drives, power supplies, control devices, robotics, motor control and other power designs, the easy mounting fixture assures a pressure of the cooling plate of about 300 N.

Features

- 400 W operating power
- Non-Inductive design
- ROHS compliant
- High insulation & partial discharge performance
- Materials in accoradance with UL 94 V-0
- Resistor is also available with preapplied PCM (Phase Change Material) (ask for details)

Technical Specifications

Resistance value	0.5 Ω ≤ 1 MΩ
Resistance tolerance	±5 % to ±10 % ±1 % to ±2 % on special request for limited ohmic values with the reduction of the max. power / pulse rating (ask for details)
Temperature coefficient	±150 ppm/°C lower TCR on special request for limited ohmic values
Power rating	400 W at 85°C bottom case temperature
Short time overload	700 W at 70°C for 10sec., ΔR = 0.4 % max.
Maximum working voltage	5,000 V DC ≙ 3.500 V AC RMS (50 Hz) higher voltage on request, not exceeding max. power
Electric strength voltage	7 kVrms / 50 Hz / 500 VA, test time 1 min. between terminal und case (up to 12 kVrms on request) voltages above 10 kVrms are tested at DC equivalent to avoid pre damage of component
Partial discharge	4 kVrms < 10 pC (up to 7 kVrms < 10 pC on request) acc. to IEC 60270
Insulation resistance	> 10 GΩ at 1,000 V
Single shot voltage	up to 12 kV norm wave (1.5/50 µsec)
Inductance	≤ 80 nH (typical), measuring frequency 10 kHz
Capacity/mass	≤ 110 pF (typical), measuring frequency 10 kHz
Capacity/parallel	≤ 40 pF (typical), measuring frequency 10 kHz
Operating temperature	-55°C to +155°C
Mounting - torque for contacts	1.8 Nm to 2 Nm, screw-in depth max. 6 mm
Mounting - torque	1.6 Nm to 1.8 Nm M4 screws
Terminal tops for additional insulation requirements	on special request (ask for details)
Cable variation	on special request (ask for details)
General pulse load information	contact our local EBG representative or contact us directly
Weight	~67 g

Dimensions in mm [inches]

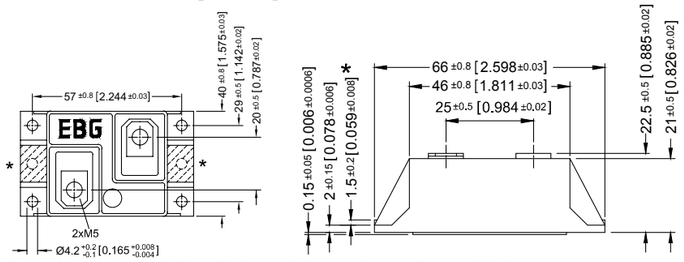

*** Optional mounting possibility with 2 mental plates and centered mountig holes.**

General Specifications

Encapsulation
Resin-filled epoxy casing with large creeping distance to mass, large air distance between the terminals and high insulation resistance

Resistance Element
Special design for low inductance and capacitance values. The element employs our special METOXFILM, which demonstrates stability while covering high wattage and pulse loading

Housing
Housings are made without color additives. The color definition is natural and can vary in different pigmentation

Contacts
Easy load connection with M5 screws (others on request)

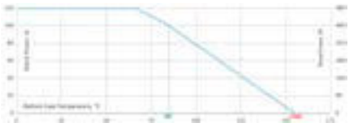

Derating (thermal resist.) UPT®-400:
5.55 W/K (0.18K/W)
Power rating: 400 W at 85°C bottom case temperature**
Please ask for detailed mounting procedure!

** This value is only applicable when using a thermal conduction to the heat sink Rth-cs<0.025 K/W. This value can be optained by using a thermal transfer compound with a heat conductivity of at least 1 W/mK. The flatness of the cooling plate must be better than 0.05 mm overall. Surface roughness should not exceed 6.4 µm.

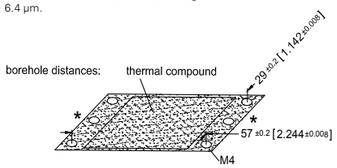

The above spec. sheet features our standard products. For further options please contact your local Miba Resistors representative
sales.mra@miba.com · US: sales@mibaresistors.com

Ultra-High-Power Resistors

Series UPT®-600

600 W resistor, US Patent-No. 5,355,281

1/2

For variable speed drives, power supplies, control devices, robotics, motor control and other power designs, the easy mounting fixture guarantees an auto-calibrated pressure to the cooling plate of about 300 N.

Features

- multiple resistors in 1 package
- Non-Inductive design
- ROHS compliant
- High insulation & partial discharge performance
- Materials in accordance with UL 94 V-0
- Resistor is also available with preapplied PCM (Phase Change Material) (ask for details)

Technical Specifications

Resistance value	≥0.03 Ω ≤ 1.5 MΩ (higher values on request)
Resistance tolerance	±5 % to ±10 % ±1 % to ±2 % on special request for limited ohmic value with the reduction of the max. power / pulse rating (ask for details)
Temperature coefficient	±500 ppm/°C (0.1 Ω ≤ 0.2 Ω) standard ±150 ppm/°C (> 0.2 Ω ≤ 1.5 MΩ) standard lower TCR on special request for limited ohmic values
Power rating	up to 600 W at 85°C bottom case temperature (see configurations)
Short time overload	1,000 W at 70°C for 10sec., ΔR = 0.4% max. (for configuration 2 and 3)
Maximum working voltage	5,000 V DC = 3.500 V AC RMS (50 Hz) higher voltage on request, not exceeding max. power
Electric strength voltage	7 kVrms / 50 Hz / 500 VA, test time 1 min. between terminal und case (up to 12 kVrms on request) voltages above 10 kVrms are tested at DC equivalent to avoid pre damage of component
Dielectric strength between R1-R2	≤ 5 kV DC (for conf. 4)
Partial discharge	4 kVrms < 10 pC (up to 7 kVrms < 10 pC on request) acc. to IEC 60270
Insulation resistance	> 10 GΩ at 1,000 V
Single shot voltage	up to 12 kV norm wave (1.5/50 µsec)
Inductance	≤ 80 nH (typical), measuring frequency 10 kHz
Capacity/mass	≤ 110 pF (typical), measuring frequency 10 kHz
Capacity/parallel	≤ 40 pF (typical), measuring frequency 10 kHz
Operating temperature	-55°C to +155°C
Mounting - torque for contacts	1.8 Nm to 2 Nm, screw-in depth max. 6 mm
Mounting - torque	1.6 Nm to 1.8 Nm M4 screws
Contacts	standard M5 (M4 on special request)
Terminal tops for additional insulation requirements	on special request (ask for details)
General pulse load information	contact our local EBG representative or contact us directly
Weight	~137 g

General Specifications

Housing
Housings are made without color additives. The color definition is natural and can vary in different pigmentation

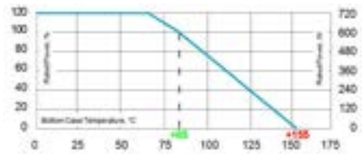

Derating (thermal resist.) UPT®-600:
8.33 W/K (0.12 K/W) for configuration 2 and 3

Power rating: 600 W at 85°C bottom case temperature*

* This value is only applicable when using a thermal conduction to the heat sink Rth-cs<0.025 K/W. This value can be obtained by using a thermal transfer compound with a heat conductivity of at least 1 W/mK. The flatness of the cooling plate must be better than 0.05 mm overall. Surface roughness should not exceed 6.4 µm.

Please note most all of our UPT customers have their own custom designed drawing. Therefore please do not hesitate to discuss your special needs with the local representative or contact us directly.

Borehole Distance

Dimensions in mm [inches]

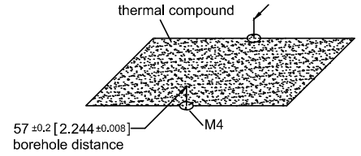

The above spec. sheet features our standard products. For further options please contact your local Miba Resistors representative.
sales.mra@miba.com · US: sales@mibaresistors.com

Series UPT®-600

Dimensions in mm [inches]

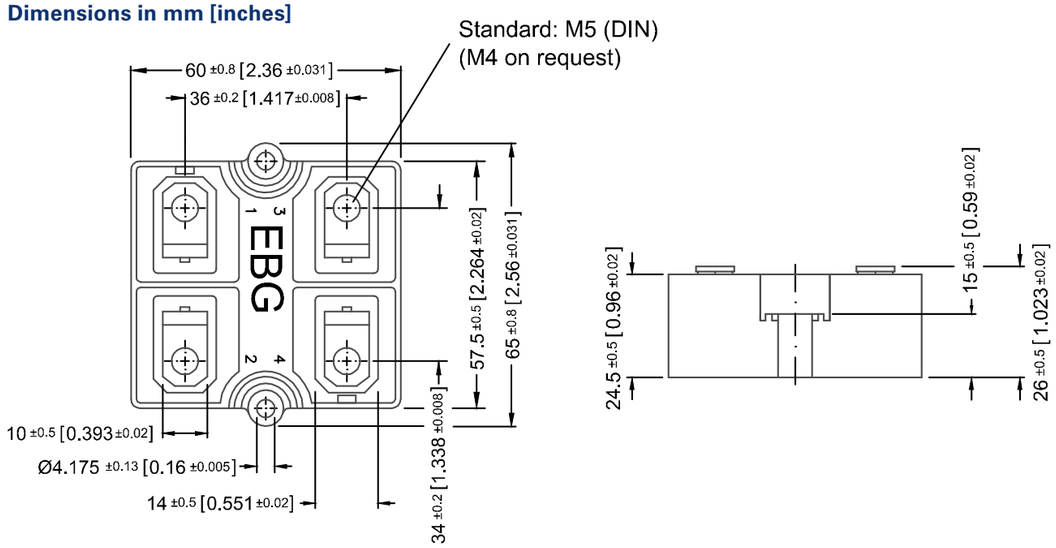

How to make a request

UPT-600-Configuration_Ohmic Value_Tolerance

For example:
UPT-600-2 5R 10% or UPT-800-7 3x50K 5%

Configurations (P / package)

Standard version

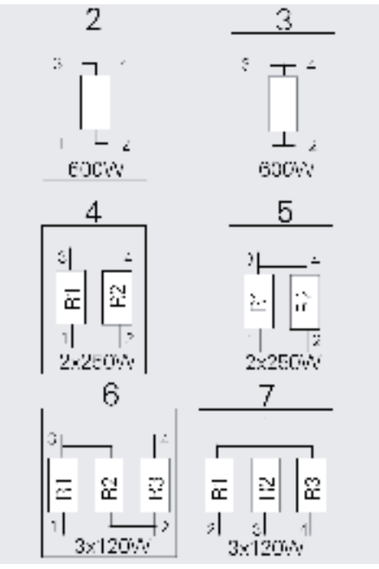

The above spec. sheet features our standard products. For further options please contact your local Miba Resistors representative
sales.mra@miba.com · US: sales@mibaresistors.com

Series UPT®-800

800 W resistor, US Patent-No. 5,355,281

For variable speed drives, power supplies, control devices, robotics, motor control and other power designs, the easy mounting fixture assures an auto-calibrated pressure to the cooling plate of about 300 N.

Features

- multiple resistors in 1 package
- Non-Inductive design
- ROHS compliant
- High insulation & partial discharge performance
- Materials in accordance with UL 94 V-0
- Resistor is also available with preapplied PCM (Phase Change Material) (ask for details)

Technical Specifications

Resistance value	≥0.03 Ω ≤ 1 MΩ (higher values on request)
Resistance tolerance	±5 % to ±10 % ±1 % to ±2 % on special request for limited ohmic values with the reduction of the max. power / pulse rating (ask for details)
Temperature coefficient	±500 ppm/°C (0.1 Ω ≤ 0.2 Ω) standard ±150 ppm/°C (> 0.2 Ω ≤ 1 MΩ) standard lower TCR on special request for limited ohmic values
Power rating	up to 800 W at 85°C bottom case temperature (see configurations)
Short time overload	1,000 W at 70°C for 10sec., ΔR = 0.4% max. (for configuration 2 and 3)
Maximum working voltage	5,000 V DC = 3.500 V AC RMS (50 Hz) higher voltage on request, not exceeding max. power
Electric strength voltage	7 kVrms / 50 Hz / 500 VA, test time 1 min. between terminal und case (up to 12 kVrms on request) voltages above 10 kVrms are tested at DC equivalent to avoid pre damage of component
Dielectric strength between R1-R2	≤ 5 kV DC (for conf. 4)
Partial discharge	4 kVrms < 10 pC (up to 7 kVrms < 10 pC on request) acc. to IEC 60270
Insulation resistance	> 10 GΩ at 1.000 V
Single shot voltage	up to 12 kV norm wave (1.5/50 µsec)
Inductance	≤ 80 nH (typical), measuring frequency 10 kHz
Capacity/mass	≤ 140 pF (typical), measuring frequency 10 kHz
Capacity/parallel	≤ 40 pF (typical), measuring frequency 10 kHz
Operating temperature	-55°C to +155°C
Mounting - torque for contacts	1.8 Nm to 2 Nm, screw-in depth max. 6 mm
Mounting - torque	1.6 Nm to 1.8 Nm M4 screws
Contacts	standard M5 (M4 on special request)
Terminal tops for additional insulation requirements	on special request (ask for details)
General pulse load information	contact our local EBG representative or contact us directly
Weight	~137 g

General Specifications

Housing
Housings are made without color additives. The color definition is natural and can vary in different pigmentation

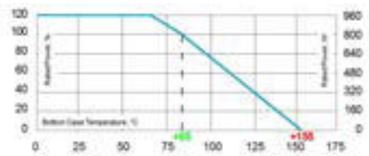

Derating (thermal resist.) UPT®-800:
9.09 W/K (0.11 K/W) for configuration 2 and 3

Power rating: 800 W at 85°C bottom case temperature*

* This value is only applicable when using a thermal conduction to the heat sink Rth-cs<0.025 K/W. This value can be obtained by using a thermal transfer compound with a heat conductivity of at least 1 W/mK. The flatness of the cooling plate must be better than 0.05 mm overall. Surface roughness should not exceed 6.4 µm.

Please note most all of our UPT customers have their own custom designed drawing. Therefore please do not hesitate to discuss your special needs with the local representative or contact us directly.

Borehole Distance

Dimensions in mm [inches]

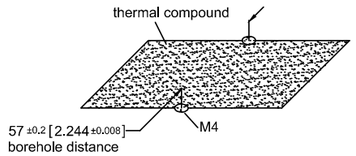

The above spec. sheet features our standard products. For further options please contact your local Miba Resistors representative.
sales.mra@miba.com · US: sales@mibaresistors.com

Series UPT®-800

Dimensions in mm [inches]

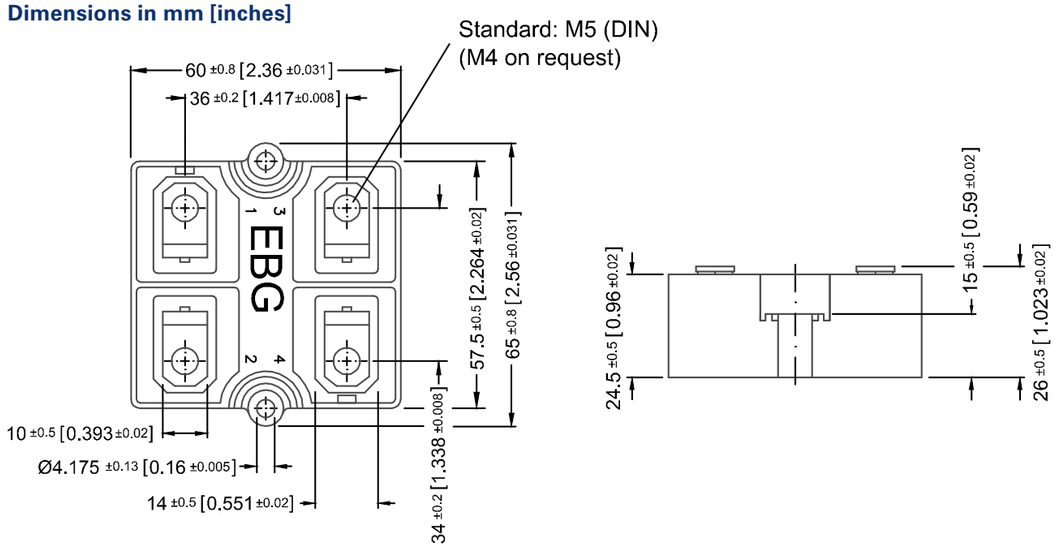

How to make a request

UPT-800-Configuration_Ohmic Value_Tolerance

For example:
UPT-800-2 5R 10% or UPT-800-4 2x1K 5%

Configurations (P / package)

Standard version

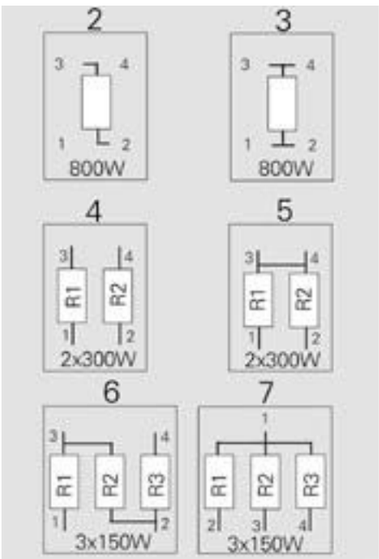

The above spec. sheet features our standard products. For further options please contact your local Miba Resistors representative
sales.mra@miba.com · US: sales@mibaresistors.com

Series UPT®-2000

2000 W resistor, US Patent-No. 5,355,281

For variable speed drives, power supplies, control devices, robotics, motor control and other power designs, the easy mounting fixture assures an auto-calibrated pressure to the cooling plate of about 300 N.

Features

- multiple resistors in 1 package
- Non-Inductive design
- ROHS compliant
- High insulation & partial discharge performance
- Materials in accordance with UL 94 V-0
- Resistor is also available with preapplied PCM (Phase Change Material) (ask for details)

Technical Specifications

Resistance value	≥0.1 Ω ≤ 6 KΩ (higher values on request)
Resistance tolerance	±5 % to ±10 %
Temperature coefficient	±250 ppm/°C standard lower TCR on special request for limited ohmic values
Power rating	up to 2000 W at 125°C bottom case temperature (see configurations)
Short time overload	2,400 W at 70°C for 10sec., ΔR = 0.4% max. (for configuration 2 and 3)
Maximum working voltage	5,000 V DC = 3.500 V AC RMS (50 Hz) higher voltage on request, not exceeding max. power
Electric strength voltage	7 kVrms / 50 Hz / 500 VA, test time 1 min. between terminal und case (up to 12 kVrms on request) voltages above 10 kVrms are tested at DC equivalent to avoid pre damage of component
Dielectric strength between R1-R2	≤ 5 kV DC (for conf. 4)
Partial discharge	4 kVrms < 10 pC (up to 7 kVrms < 10 pC on request) acc. to IEC 60270
Insulation resistance	> 10 GΩ at 1.000 V
Single shot voltage	up to 12 kV norm wave (1.5/50 µsec)
Inductance	≤ 80 nH (typical), measuring frequency 10 kHz
Capacity/mass	≤ 120 pF (typical), measuring frequency 10 kHz
Capacity/parallel	≤ 40 pF (typical), measuring frequency 10 kHz
Operating temperature	-55°C to +155°C
Mounting - torque for contacts	1.8 Nm to 2 Nm, screw-in depth max. 6 mm
Mounting - torque	1.6 Nm to 1.8 Nm M4 screws
Contacts	standard M5 (M4 on special request)
Terminal tops for additional insulation requirements	on special request (ask for details)
General pulse load information	contact our local EBG representative or contact us directly
Weight	~137 g

General Specifications

Housing
Housings are made without color additives. The color definition is natural and can vary in different pigmentation

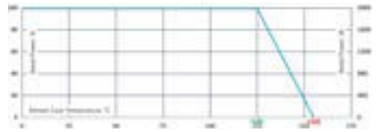

Derating (thermal resist.) UPT®-2000: 66.6 W/K (0.015 K/W) for configuration 2 and 3

Power rating: 2000 W at 125°C bottom case temperature*

* This value is only applicable when using a thermal conduction to the heat sink Rth-cs<0.025 K/W. This value can be obtained by using a thermal transfer compound with a heat conductivity of at least 1 W/mK. The flatness of the cooling plate must be better than 0.05 mm overall. Surface roughness should not exceed 6.4 µm.

Please note most all of our UPT customers have their own custom designed drawing. Therefore please do not hesitate to discuss your special needs with the local representative or contact us directly.

Borehole Distance

Dimensions in mm [inches]

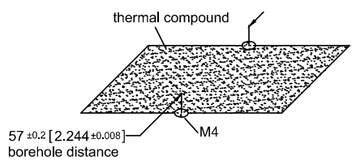

The above spec. sheet features our standard products. For further options please contact your local Miba Resistors representative.
sales.mra@miba.com · US: sales@mibaresistors.com

Series UPT®-2000

Dimensions in mm [inches]

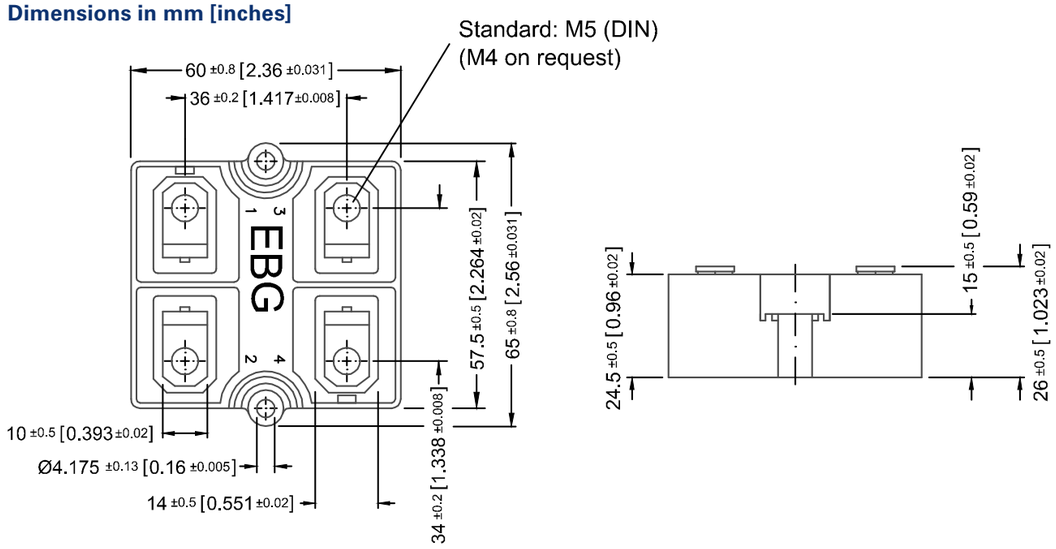

How to make a request

UPT-2000-Configuration_Ohmic Value_Tolerance

For example:
UPT-2000-2 5R 10% or UPT-2000-4 2x1K 5%

Configurations (P / package)

Standard version

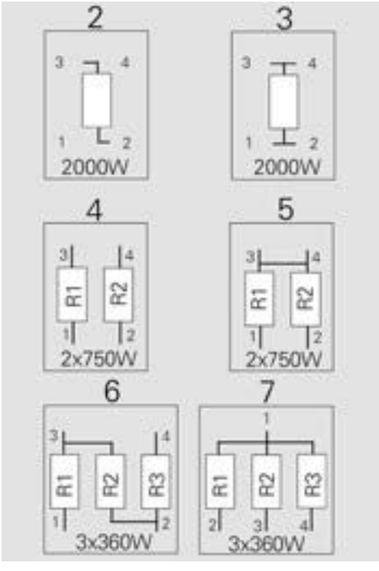

The above spec. sheet features our standard products. For further options please contact your local Miba Resistors representative

sales.mra@miba.com · US: sales@mibaresistors.com

Series ULX®-600 (very low component height)

600 W resistor, US Patent-No. 5,355,281

For variable speed drives, power supplies, control devices, robotics, motor control and other power designs.

Features

- multiple resistors in 1 package
- Non-Inductive design
- ROHS compliant
- High insulation & partial discharge performance
- Materials in accordance with UL 94 V-0
- Resistor is also available with preapplied PCM (Phase Change Material) (ask for details)

Technical Specifications

Resistance value	≥0.03 Ω ≤ 1.5 MΩ (higher values on request)
Resistance tolerance	±5 % to ±10 % ±1 % to ±2 % on special request for limited ohmic values with the reduction of the max. power / pulse rating (ask for details)
Temperature coefficient	±500 ppm/°C (0.1 Ω ≤ 0.2 Ω) standard ±150 ppm/°C (> 0.2 Ω ≤ 1.5 MΩ) standard lower TCR on special request for limited ohmic values
Power rating	up to 600 W at 85°C bottom case temperature (see configurations)
Short time overload	1,000 W at 70°C for 10sec., ΔR = 0.4 % max. (for configuration 2 and 3)
Maximum working voltage	5,000 V DC ≑ 3.500 V AC RMS (50 Hz) higher voltage on request, not exceeding max. power
Maximum continuous current	depends on the cable (ask for details)
Electric strength voltage	7 kVrms / 50 Hz / 500 VA, test time 1 min between terminal und case (up to 12 kVrms on request) voltages above 10 kVrms are tested at DC equivalent to avoid pre damage of component
Partial discharge	4 kVrms < 10 pC (up to 7 kVrms < 10 pC on request) acc. to IEC 60270
Peak current	up to 1,500 A depending on pulse length and frequency (ask for details)
Insulation resistance	> 10 G at 1,000 V
Single shot voltage	up to 12 kV norm wave (1.5/50 µsec)
Inductance	≤ 80 nH (typical), measuring frequency 10 kHz
Capacity/mass	≤ 110 pF (typical), measuring frequency 10 kHz
Capacity/parallel	≤ 40 pF (typical), measuring frequency 10 kHz
Operating temperature	res. body: -55°C to +155°C std. cables: -40°C to +120°C (other cables upon request)
Mounting - torque	1.6 Nm to 1.8 Nm M4 screws
Standard cable length	250 mm (other cable lengths on special request)
Standard cable type	H&S Radox 9 GKW AX 1,5 mm2 (other cable types on special request)
General Pulse Load information	contact our local EBG representative or contact us directly
Weight	~92 g depending on cable

General Specifications

Electric support
High-purity ceramic metalized with Miba Resistors ALTOX film on the bottom for better heat transfer and optimum discharge

Encapsulation
Resin-filled epoxy casing. High insulation resistance (CTI 600), high dielectric strength and partial discharge capability

Resistance Element
Special design for low inductance and capacitance values. The element employs our special METOXFILM, which demonstrates stability while covering high wattage and pulse loading

Housing
Housings are made without color additives. The color definition is natural and can vary in different pigmentation

Borehole Distance

Dimensions in mm [inches]

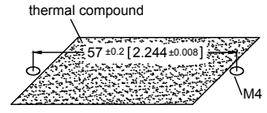

* Standard connections with 250mm cable (Radox 9 GKW AX 1,5mm²)
Other cable type or cable length on special request

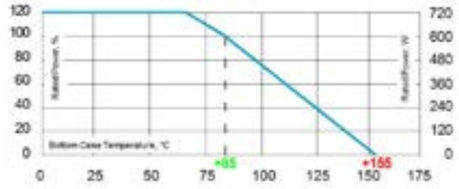

Derating (thermal resist.) ULX®-600: 8.33 W/K (0.12K/W)
Power rating: 600 W at 85°C bottom case temperature*
Please ask for detailed mounting procedure!

* This value is only applicable when using a thermal conduction to the heat sink Rth-cs<0.025 K/W. This value can be obtained by using a thermal transfer compound with a heat conductivity of at least 1 W/mK. The flatness of the cooling plate must be better than 0.05 mm overall. Surface roughness should not exceed 6.4 µm.

The above spec. sheet features our standard products. For further options please contact your local Miba Resistors representative.

sales.mra@miba.com · US: sales@mibaresistors.com

Series ULX®-600

Test Specifications*

Test	Method	Tolerance Drift**
Short time overload	1,000 W/10sec.	0.40%
Humidity steady state	56 days/40°C/95%	0.25%
Temp. Cycling	-55/+125/5cycles	0.20%
Shock	40g/4,000 times	0.25%
Vibrations	2-500Hz/10g	0.25%
Load life 3,000cyl	PN 30 min. on / 30 min off	0.40%

* The test methods are according to IEC 60068-2
** The tolerance drift is the possible change of the resistance value because of the certain test

Configurations

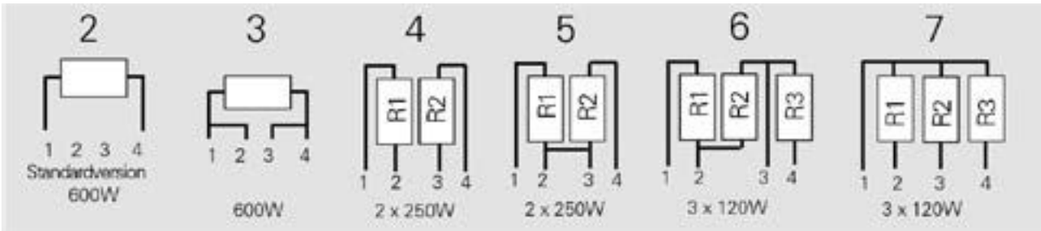

How to make a request

ULX-600-Configuration_Ohmic Value_Tolerance

For example:
ULX-600-2 620R 10% or ULX-600-4 2x15K 5%

Dimensions in mm [inches]

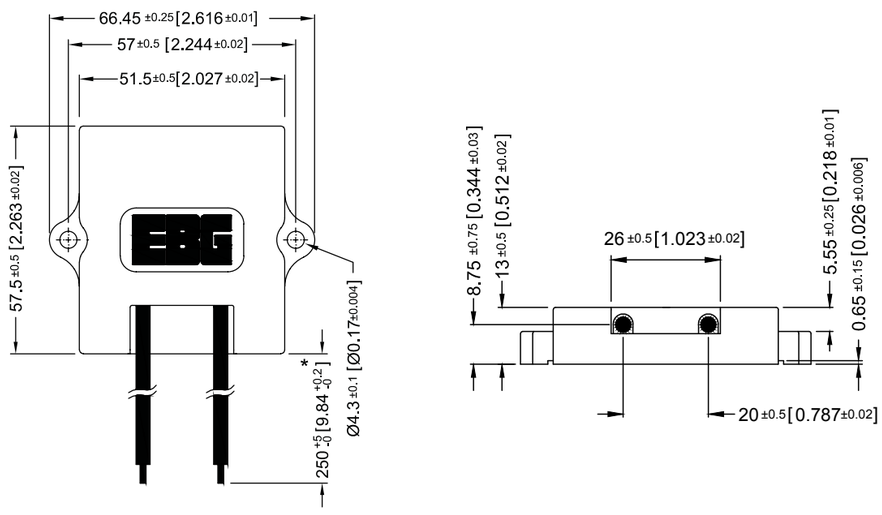

The above spec. sheet features our standard products. For further options please contact your local Miba Resistors representative
sales.mra@miba.com · US: sales@mibaresistors.com

Series ULX®-800 (very low component height)

800 W resistor

For variable speed drives, power supplies, control devices, robotics, motor control and other power designs.

Features

- multiple resistors in 1 package
- Non-Inductive design
- ROHS compliant
- High insulation & partial discharge performance
- Materials in accordance with UL 94 V-0
- Resistor is also available with preapplied PCM (Phase Change Material) (ask for details)

Technical Specifications

Resistance value	≥0.03 Ω ≤ 1 MΩ (higher values on request)
Resistance tolerance	±5 % to ±10 % ±1 % to ±2 % on special request for limited ohmic values with the reduction of the max. power / pulse rating (ask for details)
Temperature coefficient	±500 ppm/°C (0.1 Ω ≤ 0.2 Ω) standard ±150 ppm/°C (> 0.2 Ω ≤ 1 MΩ) standard lower TCR on special request for limited ohmic values
Power rating	up to 800 W at 85°C bottom case temperature (see configurations)
Short time overload	1,000 W at 70°C for 10sec., ΔR = 0.4 % max. (for configuration 2 and 3)
Maximum working voltage	5,000 V DC = 3.500 V AC RMS (50 Hz) higher voltage on request, not exceeding max. power
Maximum continuous current	depends on the cable (ask for details)
Electric strength voltage	7 kVrms / 50 Hz / 500 VA, test time 1 min. between terminal und case (up to 12 kVrms on request) voltages above 10 kVrms are tested at DC equivalent to avoid pre damage of component
Partial discharge	4 kVrms < 10 pC (up to 7 kVrms < 10 pC on request) acc. to IEC 60270
Peak current	up to 1,500 A depending on pulse length and frequency (ask for details)
Insulation resistance	> 10 G at 1,000 V
Single shot voltage	up to 12 kV norm wave (1.5/50 µsec)
Inductance	≤ 80 nH (typical), measuring frequency 10 kHz
Capacity/mass	≤ 140 pF (typical), measuring frequency 10 kHz
Capacity/parallel	≤ 40 pF (typical), measuring frequency 10 kHz
Operating temperature	res. body: -55°C to +155°C std. cables: -40°C to +120°C (other cables upon request)
Mounting - torque	1.6 Nm to 1.8 Nm M4 screws
Standard cable length	250 mm (other cable lengths on special request)
Standard cable type	H&S Radox 9 GKW AX 1,5 mm2 (other cable types on special request)
General Pulse Load information	contact our local EBG representative or contact us directly
Weight	~92 g depending on cable

General Specifications

Electric support
High-purity ceramic metalized with Miba Resistors ALTOX film on the bottom for better heat transfer and optimum discharge

Encapsulation
Resin-filled epoxy casing. High insulation resistance (CTI 600), high dielectric strength and partial discharge capability

Resistance Element
Special design for low inductance and capacitance values. The element employs our special METOXFILM, which demonstrates stability while covering high wattage and pulse loading

Housing
Housings are made without color additives. The color definition is natural and can vary in different pigmentation

Borehole Distance

Dimensions in mm [inches]

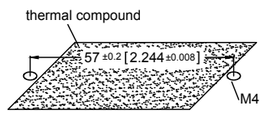

* Standard connections with 250mm cable (Radox 9 GKW AX 1,5mm²)
Other cable type or cable length on special request

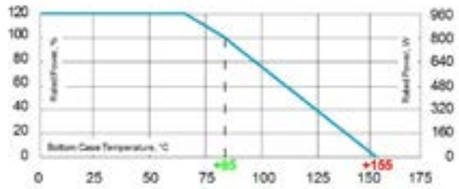

Derating (thermal resist.) ULX®-800: 9.09 W/K (0.11 K/W) for configuration 2 und 3
Power rating: 800 W at 85°C bottom case temperature*
Please ask for detailed mounting procedure!

* This value is only applicable when using a thermal conduction to the heat sink Rth-cs<0.025 K/W. This value can be obtained by using a thermal transfer compound with a heat conductivity of at least 1 W/mK. The flatness of the cooling plate must be better than 0.05 mm overall. Surface roughness should not exceed 6.4 µm.

The above spec. sheet features our standard products. For further options please contact your local Miba Resistors representative.
sales.mra@miba.com · US: sales@mibaresistors.com

Series ULX®-800

Test Specifications*

Test	Method	Tolerance Drift**
Short time overload	1,000 W/10sec.	0.40%
Humidity steady state	56 days/40°C/95%	0.25%
Temp. Cycling	-55/+125/5cycles	0.20%
Shock	40g/4,000 times	0.25%
Vibrations	2-500Hz/10g	0.25%
Load life 3,000cyl	PN 30 min. on / 30 min off	0.40%

* The test methods are according to IEC 60068-2
** The tolerance drift is the possible change of the resistance value because of the certain test

Configurations

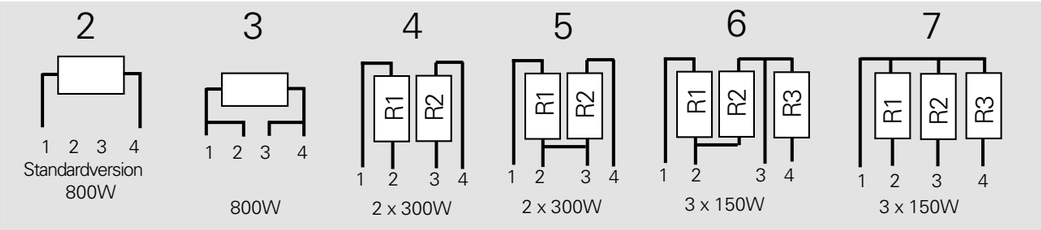

How to make a request

ULX-800-Configuration_Ohmic Value_Tolerance

For example:
ULX-800-2 3K 5% or ULX-800-4 2x15K 5%

Dimensions in mm [inches]

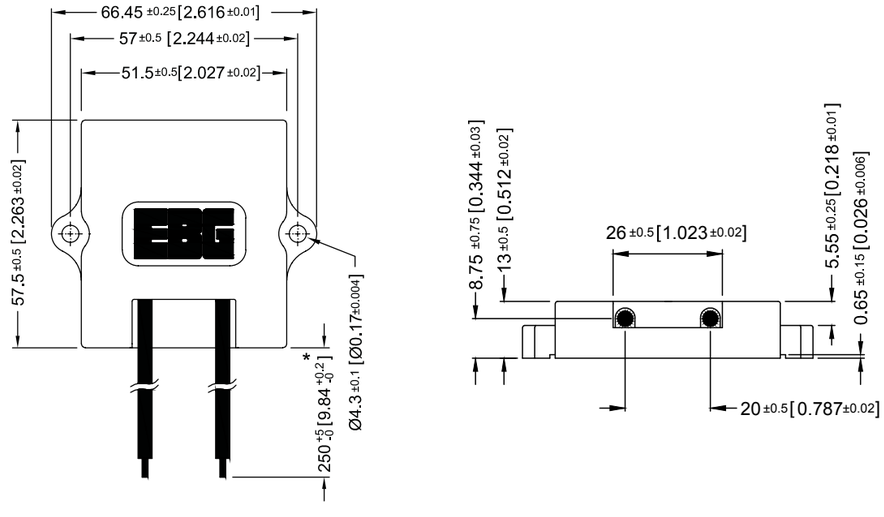

The above spec. sheet features our standard products. For further options please contact your local Miba Resistors representative
sales.mra@miba.com · US: sales@mibaresistors.com

Series ULX®-2000 (very low component height)

2,000 W resistor at 125°C bottom case

For variable speed drives, power supplies, control devices, robotics, motor control and other power designs.

Features

- multiple resistors in 1 package
- Non-Inductive design
- ROHS compliant
- High insulation & partial discharge performance
- Materials in accordance with UL 94 V-0
- Resistor is also available with preapplied PCM (Phase Change Material) (ask for details)

Technical Specifications

Resistance value	≥0.1 Ω ≤ 6 KΩ
Resistance tolerance	±5 % to ±10 %
Temperature coefficient	±250 ppm/°C standard lower TCR on special request for limited ohmic values
Power rating	up to 2000 W at 125°C bottom case temperature (see configurations)
Short time overload	2,400 W at 70°C for 10sec., ΔR = 0.4% max. (see configurations)
Maximum working voltage	5,000 V DC = 3.500 V AC RMS (50 Hz) higher voltage on request, not exceeding max. power
Maximum continuous current	depends on the cable (ask for details)
Electric strength voltage	7 kVrms / 50 Hz / 500 VA, test time 1 min. between terminal und case (up to 12 kVrms on request) voltages above 10 kVrms are tested at DC equivalent to avoid pre damage of component
Partial discharge	4 kVrms < 10 pC (up to 7 kVrms < 10 pC on request) acc. to IEC 60270
Peak current	up to 1,500 A depending on pulse length and frequency (ask for details)
Insulation resistance	> 10 G at 1,000 V
Single shot voltage	up to 12 kV norm wave (1.5/50 µsec)
Inductance	≤ 80 nH (typical), measuring frequency 10 kHz
Capacity/mass	≤ 140 pF (typical), measuring frequency 10 kHz
Capacity/parallel	≤ 40 pF (typical), measuring frequency 10 kHz
Operating temperature	res. body: -55°C to +155°C std. cables: -40°C to +120°C (other cables upon request)
Mounting - torque	1.6 Nm to 1.8 Nm M4 screws
Standard cable length	250 mm (other cable lengths on special request)
Standard cable type	H&S Radox 9 GKW AX 1,5 mm2 (other cable types on special request)
General Pulse Load information	contact our local EBG representative or contact us directly
Weight	~92 g depending on cable

General Specifications

Electric support
High-purity ceramic metalized with Miba Resistors ALTOX film on the bottom for better heat transfer and optimum discharge

Encapsulation
Resin-filled epoxy casing. High insulation resistance (CTI 600), high dielectric strength and partial discharge capability

Resistance Element
Special design for low inductance and capacitance values. The element employs our special METOXFILM, which demonstrates stability while covering high wattage and pulse loading

Housing
Housings are made without color additives. The color definition is natural and can vary in different pigmentation

Borehole Distance

Dimensions in mm [inches]

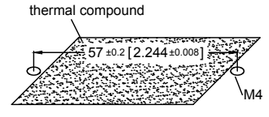

* Standard connections with 250mm cable (Radox 9 GKW AX 1.5mm²)
Other cable type or cable length on special request

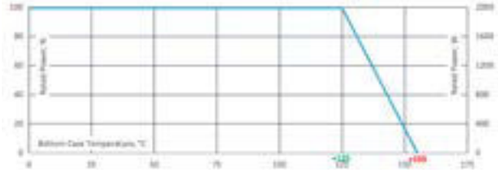

Derating (thermal resist.) ULX®-2000: 66.6 W/K (0.015 K/W) for confirguration 2 and 3
Power rating: 2,000 W at 125°C bottom case temperature*
Please ask for detailed mounting procedure!

* This value is only applicable when using a thermal conduction to the heat sink Rth-cs<0.025 K/W. This value can be obtained by using a thermal transfer compound with a heat conductivity of at least 1 W/mK. The flatness of the cooling plate must be better than 0.05 mm overall. Surface roughness should not exceed 6.4 µm.

The above spec. sheet features our standard products. For further options please contact your local Miba Resistors representative.
sales.mra@miba.com · US: sales@mibaresistors.com

Series ULX®-2000

Test Specifications*

Test	Method	Tolerance Drift**
Short time overload	1,000 W/10sec.	0.40%
Humidity steady state	56 days/40°C/95%	0.25%
Temp. Cycling	-55/+125/5cycles	0.20%
Shock	40g/4,000 times	0.25%
Vibrations	2-500Hz/10g	0.25%
Load life 3,000cyl	PN 30 min. on / 30 min off	0.40%

* The test methods are according to IEC 60068-2
** The tolerance drift is the possible change of the resistance value because of the certain test

Configurations

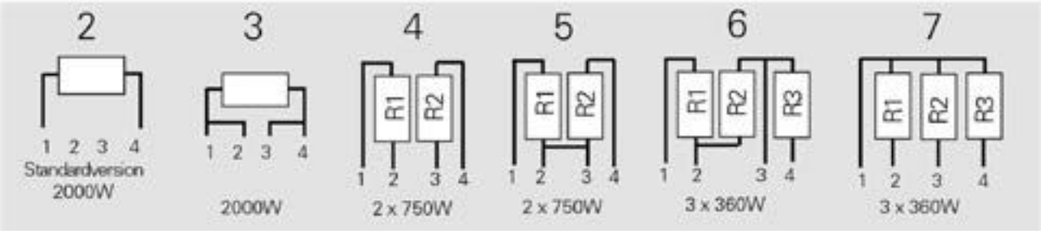

How to make a request

ULX-2000-Configuration_Ohmic Value_Tolerance

For example:
ULX-2000-2 3K 5%

Dimensions in mm [inches]

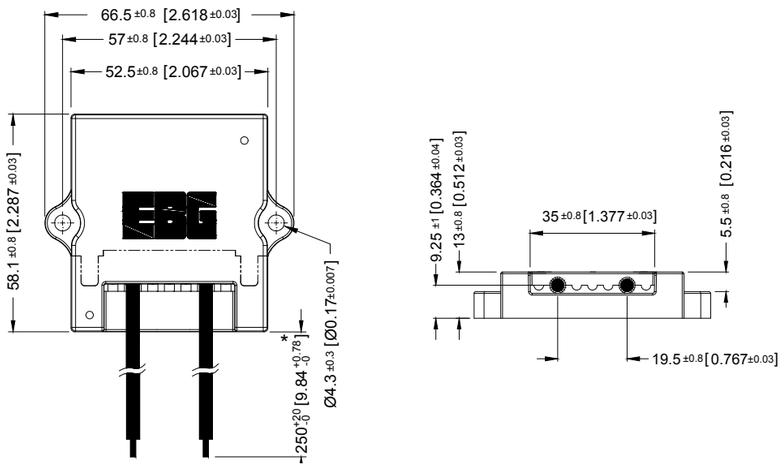

The above spec. sheet features our standard products. For further options please contact your local Miba Resistors representative
sales.mra@miba.com · US: sales@mibaresistors.com

Series UXM-400

400 W resistor, High Pulse Load Resistor

For variable speed drives, power supplies, control devices, robotics, motor control and other power designs, the easy mounting fixture assures an auto-calibrated pressure to the cooling plate of about 300 N.

Features

- 400 W operating power
- Non-Inductive design
- ROHS compliant
- High insulation & partial discharge performance
- Materials in accordance with UL 94 V-0
- Resistor is also available with preapplied PCM (Phase Change Material) (ask for details)

Technical Specifications

Resistance value	0.1 Ω ≤ 10 Ω
Resistance tolerance	±5 % to ±10 % tighter tolerances on special request for limited ohmic values with the reduction of the max. power / pulse rating (ask for details)
Temperature coefficient	±500 ppm/°C typical lower TCR on special request for limited ohmic values
Power rating	400 W at 85°C bottom case temperature
Short time overload	600 W at 70°C for 10sec., ΔR = 0.4% max.
Maximum working voltage	depending on max. pulse load capability (ask for details)
Electric strength voltage	standard 6 kV DC (up to 12 kV DC on request) terminal and case
Partial discharge	on special request (ask for details)
Insulation resistance	> 10 GΩ at 1,000 V
Creeping distance	> 42 mm
Air distance	> 14 mm
Inductance	400 nH ÷ 1µH (typical)
Capacity/mass	≤ 110 pF (typical), measuring frequency 10 kHz
Operating temperature	-55°C to +155°C
Mounting - torque for contacts	1.8 Nm to 2 Nm
Mounting - torque	1.6 Nm to 1.8 Nm M4 screws
Contacts	standard M5 (M4 on request) connection screw thread max. 7mm
Cable variation	on special request (ask for details)
Standard cable type	H&S Radox 9 GKW AX 1,5mm² (other cable types on special request)
Test Specifications	see UXP-350 series page 49
General pulse load information	contact our local EBG representative or contact us directly
Weight	~127 g

Dimensions in mm [inches]

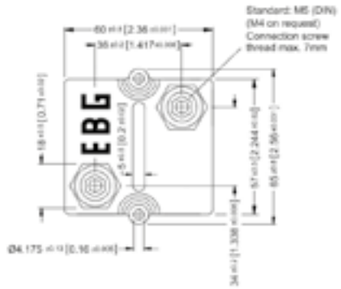

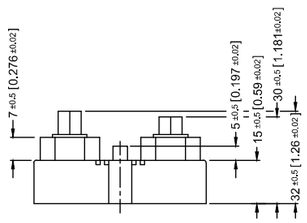

General Specifications

Electric support
Alumina ceramic metalized with Miba Resistors ALTOX film on the bottom for improved heat transfer and optimum discharge

Encapsulation
Resin-filled epoxy casing with large creeping distance to mass, large air distance between the terminals and high insulation resistance (CTI 600)

Housing
Housings are made without color additives. The color definition is natural and can vary in different pigmentation

Contacts
- Easy load connection with M4 and M5 screws
- Connector height available from 25 to 42 mm
- Various sleeves for increasing creeping distance up to 85 mm or potted cable connections are available on request

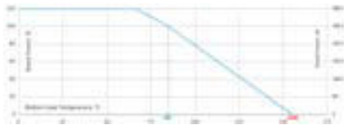

Best results can be obtained by using a thermal transfer compound with a heat conductivity of at least 1 W/mK. The flatness of the cooling plate must be better than 0.05 mm overall. Surface roughness should not exceed 6.4 µm.

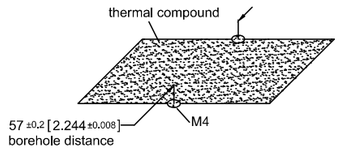

The above spec. sheet features our standard products. For further options please contact your local Miba Resistors representative.
sales.mra@miba.com · US: sales@mibaresistors.com

Voltage Dividers and Networks

MTX 2000
HVT
MTX 1000
1776-X

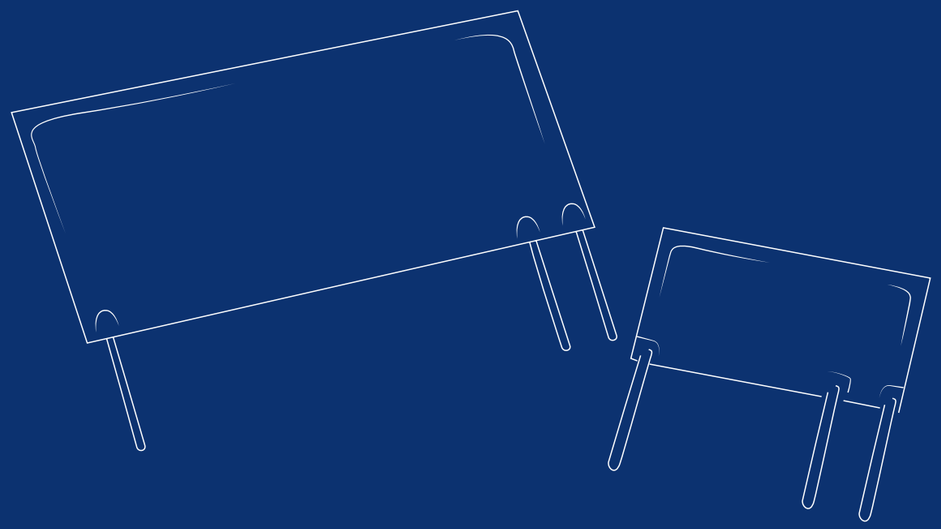

Precision High-Voltage Divider

Series MTX 2000

up to 50 W and up to 80 kV

The MTX 2000 series consists of high-quality, high-precision, high-power, high-voltage dividers for use in sophisticated resistor networks. These custom designs support a wide range of resistance value, tight voltage ratios, close tolerances and low TCRs.

Features

- up to 80 kV operating voltage
- up to 50 W operating power
- Non-Inductive design
- ROHS compliant

Technical Specifications

Resistance value	see model specifications below
Resistance tolerance	see model specifications below
Temperature coefficient	see model specifications below
Max. operating temperature	-55°C to +125°C
Dielectric strength	> 1,000 V (25°C, 75 % relative humidity)
Load life	ΔR/R 0.15 % max., 1,000 hours at rated power
Moisture resistance	ΔR/R 0.25 % max.
Thermal shock	ΔR/R 0.2 % max.
Encapsulation	**standard coating: silicone conformal** we recommend 2xpolyimide coating for use in oil and potted applications (ask for details)
Lead material	caps, nickel-plated
Torque	1.8 Nm to 2 Nm for M4, 3.8 Nm to 4 Nm for M8
Connection	standard version having no wire tap connection. Pre soldered wire connection available on special request
Weight	depending on model no. (ask for details)

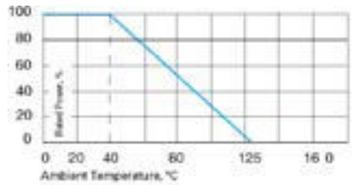

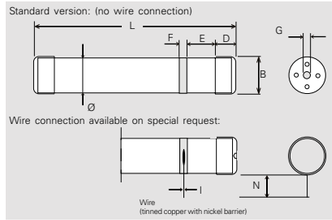

Dimensions in mm

Model no.	L	B	Ø	D	E	F	G	I	N
2000.23	156 ± 2	14.5 ± 0.2	13.5 ± 0.5	10 ± 0.2	8.5 ± 0.2	5 ± 0.5	M4	1.0 ± 0.1	30.0 ± 1
2000.105	308 ± 2.5	31.8 ± 0.3	30.5 ± 0.5	18 ± 0.2	40 ± 2	7 ± 0.5	M8	1.0 ± 0.1	30.0 ± 1

Model Specifications

Model no.	P Wattage 40°C	V Voltage kV DC				
			TCR absolute	50 ppm/°C	25 ppm/°C	15 ppm/°C
			Tolerance absolute	0.25 % - 1 %	0.1 % - 1 %	0.1 % - 1 %
			TCR ratio	25 ppm/°C	15 ppm/°C	15 / 10 ppm /°C
			Tolerance ratio	0.5 % - 0.25%	0.5 % - 0.1 %	0.5 % - 0.1 %
2000.23	10	40	R1 + R2 Ratio	2 MΩ – 2 GΩ 1:1000 – 1:20 000	20 MΩ – 1 GΩ 1:1000 – 1:20 000	20 MΩ – 500 MΩ 1:1000 – 1:10 000
2000.105	50	80	R1 + R2 Ratio	20 MΩ – 3 GΩ 1:1000 – 1:20 000	20 MΩ – 2 GΩ 1:1000 – 1:20 000	20 MΩ – 1 GΩ 1:1000 – 1:10 000

How to make a request

Model no._Ohmic Value_abs. & ratio Tolerance_ abs. & ratio TCR_ratio

For example:
MTX 2000.105 500M abs. tol. 2% abs. TCR 25ppm, ratio tol. 1%, ratio TCR 15ppm, 10.000:1

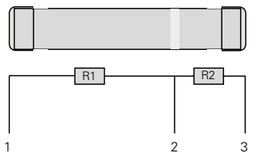

$$\text{Ratio} = \frac{R1+R2}{R2}$$

The above spec. sheet features our standard products. For further options please contact your local Miba Resistors representative.

sales.mra@miba.com · US: sales@mibaresistors.com

Precision High-Voltage Divider

Series HVT

up to 20 kV operating voltage

The HVT series of high-voltage dividers is available in six different sizes from 5 kV to 20 kV voltage rating. In these highly reliable components, Miba Resistors combines its state-of-the-art high-voltage technology with the unique METOXFILM stability. The HVT series provide tight ratio tolerance, TCR tracking and custom-designed values.

Features

- up to 20 kV operating voltage
- fully customized values and ratios
- on request custom designed version available; maximum ceramic substrate size 4 inch (101.6 mm)
- Non-Inductive design
- ROHS compliant

Technical Specifications

Resistance value	100 M and 200 M standard (other values available on special request)
Resistance tolerance	absolute tolerance: ±1 % for all resistors ratio tolerance: down to +/-0.1 %
Temperature coefficient	absolute TCR: ±100 ppm/°C (at +85°C ref. to +25°C) lower absolute TCR´s available on request ratio TCR: ±25 ppm/°C (10 ppm/°C on request)
Max. operating temperature	-55°C to +155°C
Voltage coefficient	typical -0,4 ppm/V
Ratios	1,000:1 or 100:1 (custom ratios available)
Overload	1.5 times rated voltage for 5 sec. ΔR ratio 0.5 % max.
Load Life	ratio ΔR with rated voltage applied for 1,000 hours 0.4 % max.
Moisture resistance	MIL-STD-202, method 106, ratio ΔR 0.5 % max.
Thermal shock	MIL-STD-202, method 107, Cond. C, ratio ΔR 0.25 % max.
Encapsulation	HVT-11, -16, -21: silicone conformal with dielectric withstanding voltage of 1,000 V HVT-5, -7, -12: printed silicone coating
Lead material	OFHC copper, tin-plated, 0.60 mm
Weight	depending on model no. (ask for details)

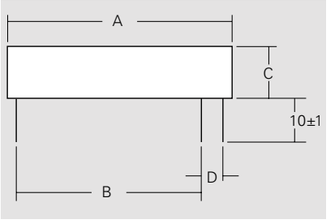

Model Specifications

Model no.	Voltage	Resistance value	P Wattage max.	Dimensions in mm ±0.4 (inches ±0.016)			
				A	B	C	D
HVT-5	5 kV	100 MΩ	0.3	25.40 (1.00)	18.00 (0.71)	7.62 (0.30)	5.08 (0.20)
HVT-7	7 kV	100 MΩ	0.5	25.40 (1.00)	18.00 (0.71)	12.70 (0.50)	5.08 (0.20)
HVT-11	10 kV	100 MΩ	1.0	37.10 (1.46)	28.00 (1.10)	25.60 (1.01)	5.08 (0.20)
HVT-12	12 kV	200 MΩ	1.0	50.80 (2.00)	33.00 (1.30)	12.70 (0.50)	15.24 (0.60)
HVT-16	15 kV	200 MΩ	1.5	51.00 (2.00)	42.00 (1.65)	17.10 (0.67)	5.08 (0.20)
HVT-21	20 kV	200 MΩ	3.0	51.00 (2.00)	42.00 (1.65)	24.60 (0.97)	5.08 (0.20)

How to make a request

Model no._Ohmic Value_abs. & ratio Tolerance_abs. & ratio TCR_ratio

For example:
HVT-7 100M abs. tol. 1%, abs. TCR 100ppm, ratio tol. 1%, ratio TCR 25ppm 100:1

The above spec. sheet features our standard products. For further options please contact your local Miba Resistors representative

sales.mra@miba.com · US: sales@mibaresistors.com

Precision High-Voltage Divider

Series MTX 1000

up to 32 kV operating voltage

The MTX 1000 series is used for advanced resistor networks where high precision is demanded. Custom designed precision voltage dividers support a wide range of resistance value, voltage ratio, close tolerances, low temperature coefficients and voltage ratings as well as liberty for mechanical dimensions.

Features

- up to 32 kV operating voltage
- Absolute / ratio tolerance range ±0.1 % to ±1 %
- Ohmic value and ratios per customer requirements
- Non-Inductive design
- ROHS compliant

Technical Specifications

Resistance value	customer specified
Resistance tolerance	absolute tolerance: ±0.1 % to ±1 % ratio tolerance: ±0.1 % to ±1 % depending on ohmic value
Temperature coefficient	absolute TCR: ±50 ppm/°C to ±15 ppm/°C ratio TCR: ±15 ppm/°C to ±5 ppm/°C depending on ohmic value
Ratios	standard ratios: 100:1, 1000:1, 10000:1 (others on special request)
Max. operating temperature	-55°C to +125°C
Dielectric strength	> 1,000 V (25°C, 75 % relative humidity)
Insulation resistance	> 10,000 MΩ (500 V, 25°C, 75 % relative humidity)
Overload	ΔR/R 0.25 % max. 1.5x Pnom, 5 sec. c
Load life	ΔR/R 0.15 % max., 1,000 hours at rated power
Moisture resistance	ΔR/R 0.25 % max.
Thermal shock	ΔR/R 0.2 % max.
Encapsulation	**standard silicone conformal (U) or glass coating (G)** we recommend 2xpolyimide coating for use in oil and potted applications (ask for details)
Lead material	tinned copper
Weight	depending on model no. (ask for details)

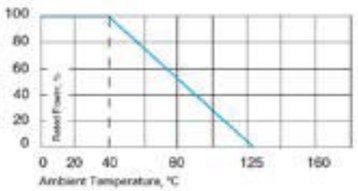

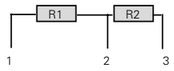

$$\text{Ratio} = \frac{R1+R2}{R2}$$

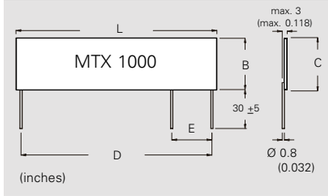

Model Specifications

Model no.	P Wattage	V Voltage kV DC	Dimensions in mm				
			L	B	C	D	E
1000.2	0.5	8*	26	8	9.1	22.9	5.08
1000.3	1.2	15*	38.5	13	14.2	35.6	7.62
1000.4	1.8	24*	51.5	15.5	16.6	48.3	10.16
1000.5	2.4	32*	77.5	15.5	16.6	73.4	10.16

* for glass coating and 2xpolyimide coating, when used in open air, please use max. voltage x 0.6 (standard ratings valid when parts used in clean air)

How to make a request

Model no._Ohmic Value_abs. & ratio Tolerance_ abs. & ratio TCR_ratio _coating

For example:
MTX 1000.2 20M abs. Tol 0.25%, abs. TCR 25ppm, ratio Tol. 0.1%, ratio TCR 15ppm, 1000:1 U

The above spec. sheet features our standard products. For further options please contact your local Miba Resistors representative.

sales.mra@miba.com · US: sales@mibaresistors.com

Series 1776-X

Input Voltage Dividers for multimeters and other instruments

Miba Resistors offers a family of voltage dividers for a variety of applications, including digital multimeters, multi-range instrumentation and other range-switching devices. This line of products uses the special Miba Resistors METOXFILM.

Many special combinations of ratios, absolute & relative tolerances and absolute temperature coefficients of resistance are available. For special requirements, please contact us.

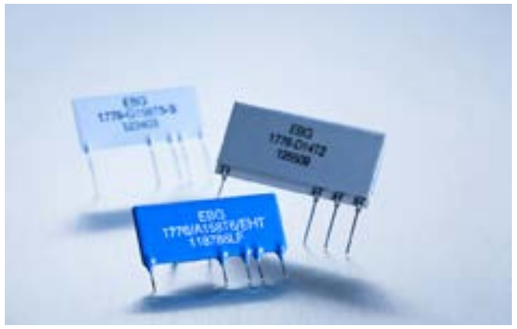

Features

- Compact precision resistor networks
- Easy-to-install package
- Non-Inductive design
- ROHS compliant

Technical Specifications

Resistance value	900 Ω to 10M Ω (see model specifications)
Ratio resistance tolerance	±0.05 % to 0.25 %
Absolute resistance tolerance	±0.1 % to 0.5 %
Ratio temperature coefficient	±10 ppm/°C to 50 ppm/°C
Absolute temperature coefficient	±25 ppm/°C to 50 ppm/°C
Voltage coefficient	typical -0,05 ppm/V
Storage temperature	-55°C to +165°C
Load life (ratio stability)	< 0.04 %
Shelf life (ratio stability)	< 0.02 % (six months)
High stability under load	< 0.2 %
Number of decades	3 to 6
Weight	ask for details

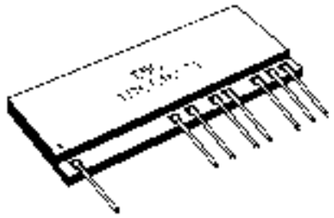

Model Specifications

Model no.	Resistance values R1 Ω	R2 Ω	R3 Ω	R4 Ω	R5 Ω	Figure	Voltage rating	Absolute tol. %	Ratio tol. %	Absol. TCppm/°C	Ratio TC ppm/°C	Vol. coef. ratio ppm/V	Ratio stability % change in ratio: Load life	Shelf life	Over-Voltage	
B169 T3-X	9M	900K	90K	9K	900	1	1200	0.1	0.1	30	10	0.1	0.02	0.01	0.01	C
B168 T3-X	9M	900K	90K	9K	1K	1	1200	0.1	0.1	30	10	0.1	0.02	0.01	0.01	C
E167 T1-X	9M	900K	90K	9K	900	2	1200	0.25	0.25	50	50	0.5	0.04	0.02	0.04	C
B167 T1-X	9M	900K	90K	9K	900	2	1200	0.1	0.1	50	50	0.5	0.04	0.02	0.04	C
E166 T1-X	9M	900K	90K	9K	1K	2	1200	0.25	0.25	50	50	0.5	0.04	0.02	0.04	C
B166 T1-X	9M	900K	90K	9K	1K	2	1200	0.1	0.1	50	50	0.5	0.04	0.02	0.04	C
E16 T1-X	9M	900K	90K	9K	900	3	1200	0.25	0.25	50	50	0.3	0.04	0.02	0.04	C
B16 T1-X	9M	900K	90K	9K	900	3	1200	0.1	0.1	50	50	0.2	0.02	0.01	0.02	C
A16 T1-X	9M	900K	90K	9K	900	3	1200	0.1	0.05	50	50	0.2	0.02	0.01	0.02	C
E161 T1-X	9M	900K	90K	9K	1K	3	1200	0.25	0.25	50	50	0.3	0.04	0.02	0.04	C
D161 T1-X	9M	900K	90K	9K	1K	3	1200	0.25	0.1	50	50	0.2	0.02	0.01	0.02	C
C161 T1-X	9M	900K	90K	9K	1K	3	1200	0.25	0.05	50	50	0.2	0.02	0.01	0.02	C
F37 T3-X	9M	900K	90K	10K	N/A	4	1200	+0-0.5	0.1	30	10	0.02	0.02	0.01	0.01	
F379 T3-X	9M	900K	90K	10K	N/A	5	1200	+0-0.5	0.1	30	10	0.02	0.02	0.01	0.01	
C15 T3-X	9M	900K	90K	10K	N/A	6	1200	0.25	0.05	30	10	0.02	0.02	0.01	0.01	
D15 T3-X	9M	900K	90K	10K	N/A	6	1200	0.25	0.1	30	10	0.02	0.02	0.01	0.01	
D14 T2-X	9.9M	90K	10K	N/A	N/A	7	1200	0.25	0.1	30	25	0.2	0.02	0.01	0.02	C
D14 T3-X	9.9M	90K	10K	N/A	N/A	7	1200	0.25	0.1	30	10	0.02	0.02	0.01	0.01	C
E39 T3-X	10M	1.111M	101.01K	10.01K	1.0001K	8	1200	0.25	0.25	30	10	0.1	0.02	0.01	0.01	C
B39 T3-X	10M	1.111M	101.01K	10.01K	1.0001K	8	1200	0.1	0.1	30	10	0.1	0.02	0.01	0.01	C
G39 T1-X	10M	1.111M	101.01K	10.01K	1.0001K	8	1200	0.5	0.5	50	50	0.5	0.04	0.02	0.04	C
E39 T1-X	10M	1.111M	101.01K	10.01K	1.0001K	8	1200	0.25	0.25	50	50	0.5	0.04	0.02	0.04	C
E159 T5-X	900K	90K	9K	900	N/A	9	750	0.25	0.25	25	25	0.4	0.02	0.01	0.02	C
B159 T6-X	900K	90K	9K	900	N/A	9	750	0.1	0.1	25	15	0.3	0.02	0.01	0.02	C
A159 T6-X	900K	90K	9K	900	N/A	9	750	0.1	0.05	25	15	0.3	0.02	0.01	0.02	C
G158 T5-X	900K	90K	9K	1K	N/A	9	750	0.25	0.25	25	25	0.4	0.02	0.01	0.02	C
B158 T6-X	900K	90K	9K	1K	N/A	9	750	0.1	0.1	25	15	0.3	0.02	0.01	0.02	C
A158 T6-X	900K	90K	9K	1K	N/A	9	750	0.1	0.05	25	15	0.3	0.02	0.01	0.02	C

for „**X**" in model no., please select (surface finish): **B** - printed silicone, **E** - epoxy encapsulation, **C** - ceramic cover plate (if available), **S** - silicone conformal

The above spec. sheet features our standard products. For further options please contact your local Miba Resistors representative

sales.mra@miba.com · US: sales@mibaresistors.com

Custom-designed elements available

The various types of multiple METOXFILM circuits feature the same excellent performance characteristic of other Miba Resistors metal oxide devices. Careful attention is devoted to the individual customer's design so as to comply not only with the requirements of resistance value, tolerance and TCR, but also power handling and stability during life, even under adverse conditions.

Most of Miba Resistors multiple component designs are computer generated and thus avoid any possibility of "hot spot" long-term deterioration. In addition, trimming is accomplished in digital step fashion by computer-controlled lasers.

Miba Resistors owns several US- and European-manufactured lasers, which enable us to meet a wide range of requirements.

While Miba Resistors has developed a standard product line of voltage divider models as shown here, we are also well suited to develop an exact custom-designed circuit for you, employing high precision, high stability, low TCR and wide resistance range coverage without neglecting your important requirements.

We encourage you to consult our Applications Engineering Department about your special requirements.

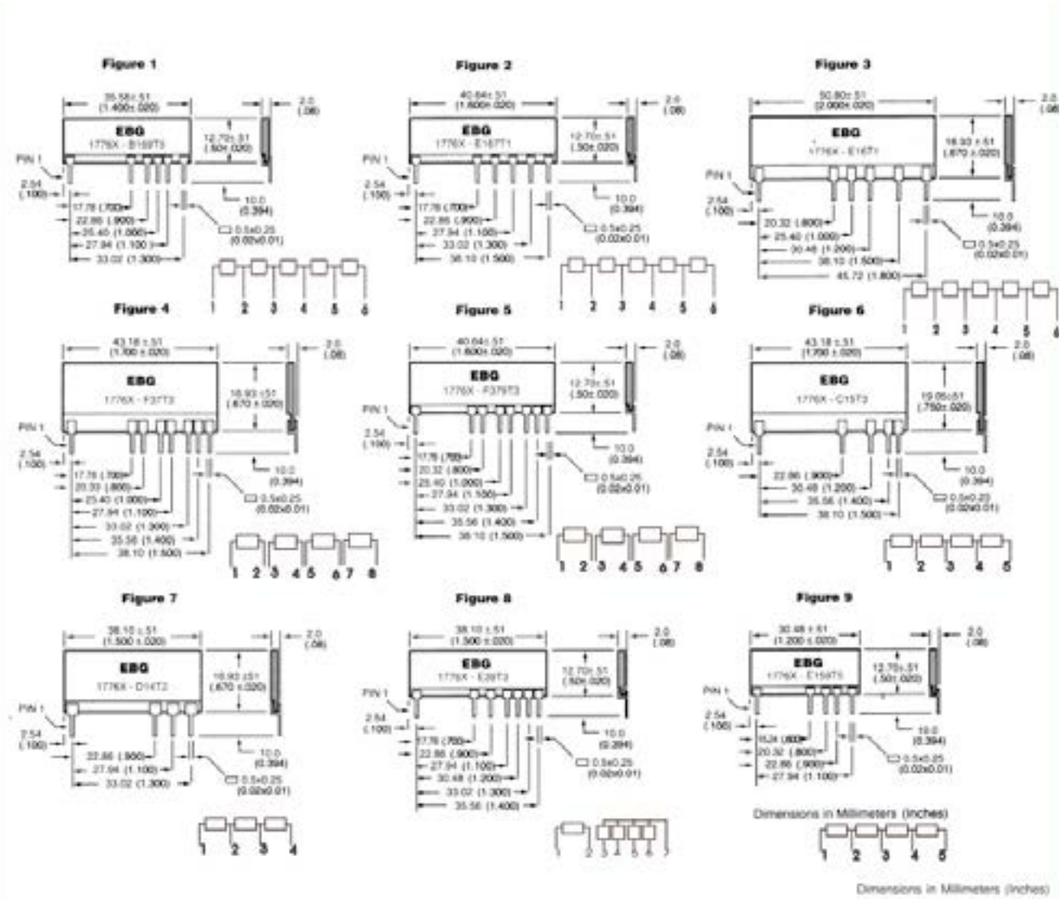

The above spec. sheet features our standard products. For further options please contact your local Miba Resistors representative.

sales.mra@miba.com · US: sales@mibaresistors.com

Metal Film

UPR / UPSC
EE / NE

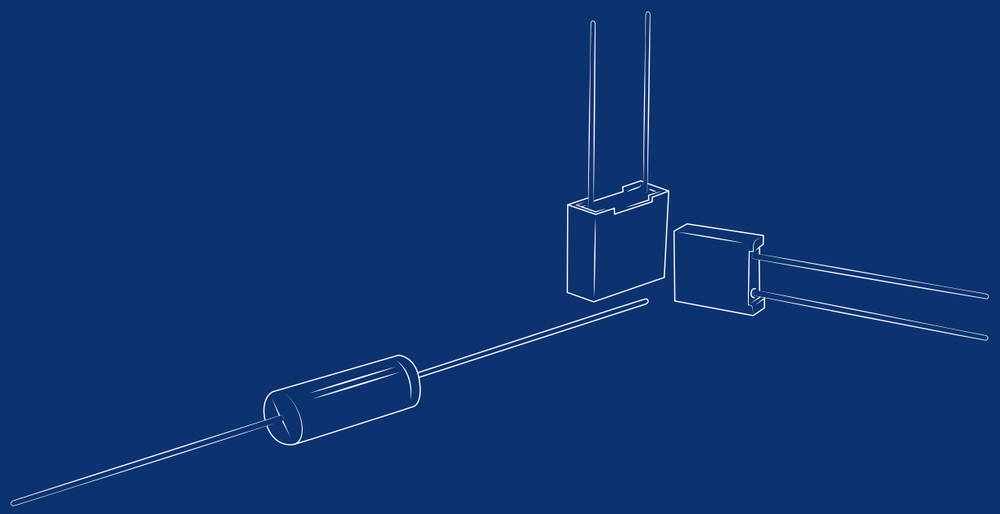

Series UPR / UPSC

Radial resistors, extremely precise

The advantage of Miba Resistors metal film resistors is it´s particularly high precision in terms of ohmic value, TC and long-term stability.

Features

- High precision ohmic values
- Low temperature coefficient precision resistors
- Long-term stability
- Ohmic range 10 Ω to 5 MΩ
- Non-Inductive design
- ROHS compliant

Technical Specifications

Resistance value	UPSC: 40 Ω ≤ 5 MΩ UPR: 10 Ω ≤ 5 MΩ
Resistance tolerance	±1 % standard tolerances to ± 0.01 % on special request
Temperature coefficient	±2 ppm/°C to ±25 ppm/°C
Long-term stability	better than ±0.05 % per 2,000 hours of operation
Std. operating temperature	-55°C to +85°C
TC temperature range	-10°C to +70°C (at +85°C ref. to +25°C)
Overload	6.25 times rated power for 5 seconds at voltage not to exceed 1.5 times maximum rated working voltage, ΔR less than 0.1 % + 0.01 Ω
Load life	2,000 hours at 125°C ΔR less than 0.5 % + 0.01 Ω
Moisture resistance	MIL-STD-202, method 106 ΔR less than 0.4 % + 0.01 Ω
Thermal shock	MIL-STD-202, method 107, Cond. B, ΔR less than 0.2 % + 0.01 Ω
Insulation resistance	> 10,000 MΩ at 250 V DC
Low temperature operation	ΔR less than 0.15 % + 0.01 Ω
Dielectric withstanding voltage	ΔR less than 0.15 % + 0.01 Ω
Vibration	ΔR less than 0.2 % + 0.01 Ω
Shock	ΔR less than 0.2 % + 0.01 Ω

Model no.	Temperature coefficient ppm/°C	Wattage +70°C	Max. working voltage	Dielect strength V DC
UPSC	± 2 to ± 25	0.20	300	500
UPR	± 2 to ± 25	0.20	250	400

Tests	Conditions	MIL-R-55182/9	Typical drifts
Power conditioning (108)	100 hours/rated power at +125°C 90'/30' cycle	-	± 0.02% combined test
Thermal shock (107)	5 cycles -65°C / +150°C	± 0.2 % + 0.01 Ω combined test	
Short time overload	6.25 times rated power / 5 sec.		
Low temperature storage and operation	1h stor. 45 min rated power at -65°C	± 0.15 % + 0.01 Ω	-
	24h stor. 45 min rated power at -65°C	-	+ 0.01 %
Terminal strength (211)	2lb pull test	± 0.2 % + 0.01 Ω	+ 0.01 %
Dielectric withstanding voltage (301)	300 V atmospheric 200 V / 100.000 ft.	± 0.15 % + 0.01 Ω	+ 0.01 %
Resist to soldering (210)	260°C / 5 sec.	± 0.1 % + 0.01 Ω	+ 0.01 %
Moisture resistance (106)	10 days	± 0.4 % + 0.01 Ω	+ 0.01 %
Shock	10 shocks 100g 6ms sawtooth	± 0.2 % + 0.01 Ω	+ 0.01 %
Vibration (204)	10 to 2000 Hz. 20g 8 hours	± 0.2 % + 0.01 Ω	+ 0.01 %
Load life (108)	2000 hours at rated power at +25°C, +85°C or +125°C	± 0.5 % + 0.01 Ω	+ 0.05 %
	10,000 hours at rated power at +125°C	± 2 % + 0.01 Ω	+ 0.2 %
Storage life	10,000 hours no load at room conditions	-	+ 0.005 %

Dimensions

Dimensions	Dimensions in millimeter (inches)	
	UPSC	**UPR**
A	7.50 ± .20 (.295 ± .008)	10.50 ± .30 (.413 ± .012)
B	8.50 ± .20 (.335 ± .008)	9.00 ± .30 (.354 ± .012)
C	2.50 ± .20 (.098 ± .008)	4.00 ± .30 (.157 ± .012)
D	0.63 ± .05 (.025 ± .002)	0.63 ± .05 (.025 ± .002)
E	3.81 ± .38 (.150 ± .015)	7.62 ± .38 (.300 ± .015)
F	25 ± 1 (.98 ± .04)	18 ± 5 (0.71 ± .196)

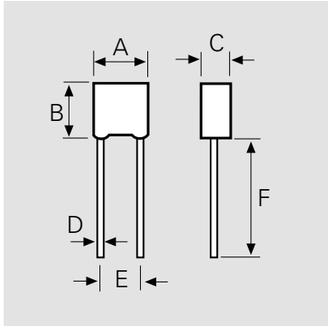

How to make a request

Model no._Ohmic Value_Tolerance_TCR

For example:
UPR 120R 0.1% 2ppm or
UPSC 50R 0.1% 2ppm

The above spec. sheet features our standard products. For further options please contact your local Miba Resistors representative.

sales.mra@miba.com · US: sales@mibaresistors.com

High Precision Metal Film Resistors

Series EE

Molded style

The EE series conform dimensionally to the RN series of MIL-R-10509 and the RNR series of MIL-R-55182. All of Miba Resistors Metal Film Resistor series offer performances that exceed the requirements of both of these specifications. EE series can be used for automatic insertion and/or encapsulation.

Technical Specifications

Resistance value	10 Ω ≤ 10 MΩ (other values on special request)
Resistance tolerance	±0.02 % to ±1 %
Temperature coefficient	±5 ppm/°C to ±50 ppm/°C TCR referenced to 25°C, ΔR taken at +25°C and +85°C (other TCR on special request)
	elements are produced and tested in accordance with MIL-R-150509, MIL-R-55182, MIL-STD-202
Special feature	series UAR (ask for details)

Model no.	Wattage 70°C	Max. continuous oper. Volt.	Resistance values		Dimensions in millimeters (inches)		
			Min.	Max.	L	D	A
EE 1/20	0.125	200	10 Ω	2 MΩ	4.30 ± .30 (.169 ± .01)	1.90 ± .30 (.075 ± .01)	.40 ± .05 (.016 ± .002)
EE 1/10	0.250	200	10 Ω	10 MΩ	6.80 ± .30 (.268 ± .01)	2.50 ± .30 (.169 ± .01)	.60 ± .05 (.024 ± .002)
EE 1/8	0.500	250	10 Ω	10 MΩ	10.20 ± .30 (.402 ± .01)	3.80 ± .30 (.149 ± .01)	.60 ± .05 (.024 ± .002)
EE 1/4	0.750	300	10 Ω	10 MΩ	15.10 ± .30 (.594 ± .01)	5.20 ± .30 (.205 ± .01)	.60 ± .05 (.024 ± .002)
EE 1/2	1.000	350	10 Ω	10 MΩ	18.40 ± .30 (.724 ± .01)	6.50 ± .30 (.256 ± .01)	.80 ± .05 (.031 ± .002)

On special request, Miba Resistors will conduct a "burn-in" of these elements for ultimate stability. Please refer to the UAR (Ultra Accurate Resistor) series and ask for a detailed datasheet!

Type MIL-R-10509	EE 1/20 RN55	EE 1/10 RN55	EE 1/8 RN60	EE 1/4 RN65	EE 1/2 RN70
Power rating (W at 125°C)	.05	.10	.125	.25	.50
Max. working voltage (V)	200	200	250	300	350

How to make a request

Model no._Ohmic value_Tolerance_TCR

For example:
EE 1/2 10M 0.1% 5ppm or NE 1/8 10R 1% 25ppm

Series NE

Molded style

Miba Resistors NE series features extremely low ranges. As a result of a special proprietary filming method, a nickel film is employed with controlled amounts of other metals, which results in fracturial resistance value availability, but with low temperature coefficient of resistance and high stability.

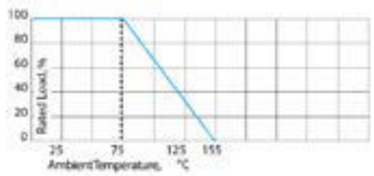

Technical Specifications

Resistance value	0.05 Ω ≤ 10 Ω (other values on special request)
Resistance tolerance	±0.05 % to ±5 %
Temperature coefficient	according to drawing
Operating temperature	-55°C to +155°C
Insulation resistance	104 MΩ at 500 V DC
Noise	less than 0.05 µV/V

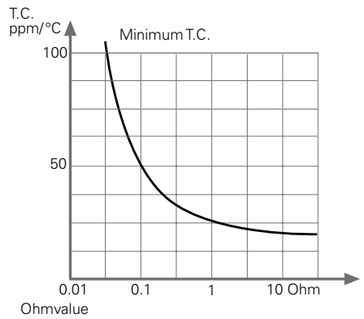

Model no.	Wattage	Resistance values		Dimensions in millimeters (inches)		
		Min.	Max.	L	D	A
NE 1/10	0.25	0.05 Ω	10 Ω	6.80 ± .30 (.268 ± .01)	2.50 ± .30 (0.98 ± .01)	.60 ± .05 (.024 ± .002)
NE 1/8	0.50	0.05 Ω	10 Ω	10.20 ± .30 (.402 ± .01)	3.80 ± .30 (.149 ± .01)	.60 ± .05 (.024 ± .002)
NE 1/4	1.00	0.05 Ω	10 Ω	15.10 ± .30 (.594 ± .01)	5.20 ± .30 (.205 ± .01)	.60 ± .05 (.024 ± .002)
NE 1/2	1.50	0.05 Ω	10 Ω	18.40 ± .30 (.724 ± .01)	6.50 ± .30 (.256 ± .01)	.80 ± .05 (.031 ± .002)

The above spec. sheet features our standard products. For further options please contact your local Miba Resistors representative

sales.mra@miba.com · US: sales@mibaresistors.com

Shunts, Pulse Load, Carbon, Water-cooled, Pre-charge Resistors, Miba POWERcloser®

PCS
ESP
CSR
LCR6000
RST5N
Miba PowerCloser

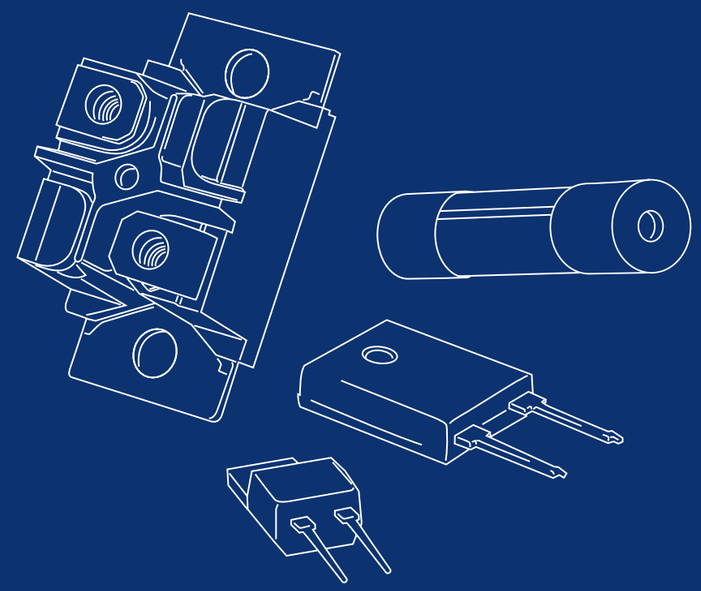

Series PCS

Precision Current Sense Resistors

The PCS series uses Miba Resistors state-of-the-art technology to provide a highly reliable resistor with a Non-Inductive design. This makes the PCS resistor ideal for many current-monitoring and control applications.

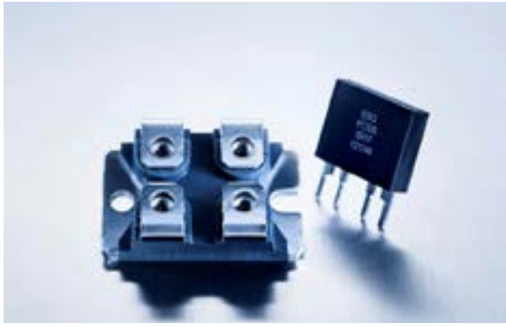

Features

- 3 W / 60 W / 100 W current sense resistor - 2 unique packages
- Four-terminal Kelvin connection
- 100% QC measurement
- Non-Inductive design
- ROHS compliant
- Housing materials in accordance with UL 94 V-0

PCS-100

Resistance value	0.5 mΩ ≤ 1 Ω (other values on special request)
Resistance tolerance	±1 % to ±5 % (0.5 % on special request for limited ohmic values)
Temperature coefficient	< 60 ppm/°C (< 500 ppm/°C 27 mΩ to 49 mΩ) referenced to 25°C, ΔR taken at 15° and +105°C
Power rating	100 W (at 70°C case temperatur) up to 150 A permanent not to exceed Ohm´s Law power load
Pulse current	up to 500 A / 0.5 sec. (depending on ohmic value)
Dielectric strength voltage	1,000 V DC (higher other on special request)
Heat resistance	Rth < 0.56 k/W
Protection class	acc. to IEC 950/CSA22.2 950/M – 89 and EN 60950.88:2
Mounting – torque for contacts	1.1 Nm to 1.3 Nm 8 (static), screw-in depth max. 5 mm
Mounting – torque for base plate	1.3 Nm to 1.5 Nm (static)
Operating temperature	-55°C to +150°C
Storage temperature	-40°C to +85°C
Weight	~30 g

PCS-3

Resistance value	1 mΩ ≤ 60 mΩ (60 mΩ - 1 Ω on special request)
Resistance tolerance	±1 % to ±5 % (0.5 % on special request for limited ohmic values)
Temperature coefficient	60 ppm/°C (typical) referenced to 25°C, ΔR taken at -15°C and +105°C; for values > 60 mΩ (ask for details)
Power rating	3 W at 70°C 40 A permanent (higher on special request)
Pulse current	up to 200 A / 0.5 sec. (depending on ohmic value)
Load life	1,000 hours at rated power at +70°C, DR 0.2 % max.
Thermal shock	MIL-STD-202, method 107, Cond. A, DR 0.2 % max.
Moisture resistance	MIL-STD-202, method 106, DR 0.2 % max
Terminal material	Kelvin Terminals; tinned copper
Encapsulation	polyester over resistance element
Operating temperature	-55°C to +150°C
Storage temperature	-40°C to +85°C
Weight	~6 g

PCS-60 The resistor equals PCS-100 except:

Temperature coefficient	< 60 ppm/°C (< 500 ppm/°C: 20 mΩ to 49 mΩ) referenced to 25°C, ΔR taken at -15°C and +105°C
Power rating	60 W (at 70°C case temperature)
Dielectric strength voltage	up to 4,000 V DC or 2,800 V AC (higher values on special request)
Operating temperature	-55°C to +150°C
Storage temperature	-40°C to +85°C

Power Rating (for all models)

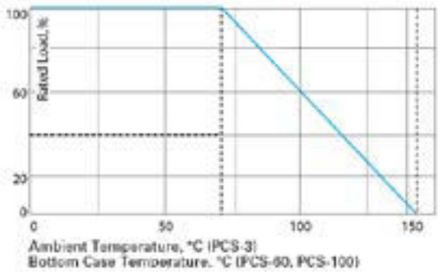

PCS-100 / PCS-60

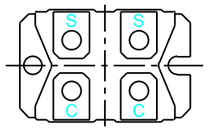

C = current connection (source)
S = voltage connection (sense)

For dimensions, please see our HXP 200 series page 44.

PCS- 3 Dimensions in mm [inches]

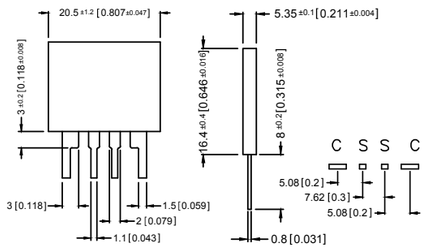

How to make a request

Model no._Ohmic Value_Tolerance

For example:
PCS-100 0R08 1% or PCS-60 0R001 2%

The above spec. sheet features our standard products. For further options please contact your local Miba Resistors representative

sales.mra@miba.com · US: sales@mibaresistors.com

Series ESP

The ESP resistor series is the ideal solution for high pulse load / low frequency applications. High thermal capacity, suitable for applications without air cooling (better performance with cooling). The resistors are used in dumping or braking circuit.

Features

- High pulse rating (ask for details)
- Absorb high pulse energy within short period
- High quality ceramic cylinder body with brass terminals
- Good pulse load capability
- Non-Inductive design
- ROHS compliant
- Housing materials in accordance with UL 94 V-0

Technical Specifications

ESP-62/14

Resistance value	1 Ω ≤ 1 KΩ (other values on special request)
Resistance tolerance	±5 % to ±10 %
Temperature coefficient	±250 ppm/°C (at +85°C ref. to +25°C)
Power rating	high pulse rating (ask for details)
Maximum operating voltage	1.000 V (higher on request)
Pulse Energy Rating	2.800 J at 1 sec.
Mounting	M4 scews, max. torque 3 Nm (static)

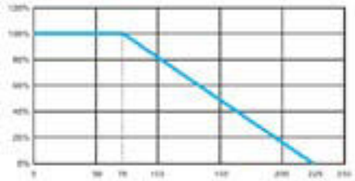

ESP-62/20

Resistance value	1 Ω ≤ 1 KΩ (other values on special request)
Resistance tolerance	±5 % to ±10 %
Temperature coefficient	±250 ppm/°C (at +85°C ref. to +25°C)
Power rating	high pulse rating (ask for details)
Maximum operating voltage	1.000 V (higher on request)
Pulse Energy Rating	3.300 J at 1 sec.
Mounting	M4 scews, max. torque 3 Nm (static)

How to make a request

ESP-model no._Ohmic Value_Tolerance

For example:
ESP-62/14 20R 10%

Model Specifications

Model no.	Time contant = 0.5 s	Dimensions in mm	
		A ±0.50	**Ø B** ±0.50
ESP-62/14	E = 2.000 J	62.00	15.00
ESP-62/20	E = 2.800 J	62.00	21.00

Possible Pulse Load ESP-62/20

2300 J for τ = 0.7s, time between pulses 60s
3300 J for τ = 1s, time between pules 120 s
4500 J for τ = 1.4s, time between pules 180s

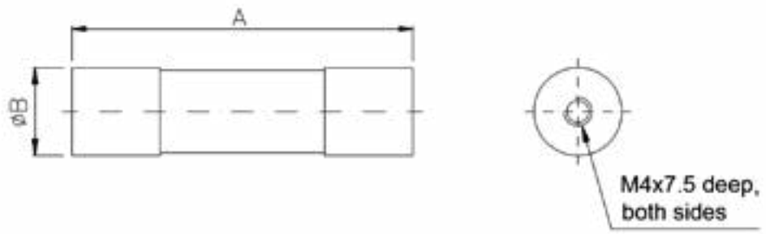

The above spec. sheet features our standard products. For further options please contact your local Miba Resistors representative.

sales.mra@miba.com · US: sales@mibaresistors.com

High Energy Carbon Ceramic Resistors

Series CSR

High Energy Resistor, PCB mounting

1/1

High energy pulse capability, suitable for electrical transmission, traction, pulse power supply, inductive heating, and other applications.

Features

- 100 % active materials
- Low inductance, suitable for HF applications
- Compact size
- PCB mounting
- Epoxy coating with good humidity resistance
- ROHS compliant
- Materials in accordance with UL 94 V-0

Technical Specifications

Resistance value	see model specifications
Resistance tolerance	±20 % standard (±10 % on special request)
Temperature coefficient	-500 ppm/°C to -1500 ppm/°C
Linear expansion coefficient	~5 ppm/°C to 15 ppm/°C
Long term working temperature	up to 150°C (slight color change is normal, without functional influence)
Max. pulse voltage (kV) (1.2 / 50 µs)	see model specifications
Max. AC working voltage (50 Hz / rms)	see model specifications; t = insertion time (ms)
Thermal time constant	T (s) = Emax (25°C) / Wmax (25°C), cooling t ≥ 4 T
Contact	4 terminal spring contact for stable PCB mounting, the PCB hole diameter of ~2-3 mm is recommended. Mild solder material with melting point of 230°C or less is suggested
Terminals	gold plated brass material (other terminal options available on request)
Weight	depending on model no. (ask for details)

How to make a request

Model no._Ohmic value_Tolerance

For example:
CSR-29 100R 20%

Applicable Standard

IEC60115-1 : 2001

Model Specifications

Model no.	Rated Power @25°C (W)	Max. Energy @25°C (J)	Resistance values		Dimensions in millimeters			Max. pulse voltage	Max. AC working voltage
			Min. Ω	Max. Ω	Lo (max)	Lp	Do (max)	(kV) (1.2 / 50 µs)	(50 Hz / rms)
CSR-27	3.5	1000	2R	500R	18	14.5 ± 0.5	21	0.79R x (-1+√(1+29/R))	1.3 x $(2.0R/t)^{0.3}$
CSR-28	5	1775	2R	700R	29	25.5 ± 0.5	21	0.79R x (-1+√(1+52/R))	2.4 x $(1.1R/t)^{0.3}$
CSR-29	6.5	2950	1R	500R	29	25.5 ± 0.5	26	1.26R x (-1+√(1+33/R))	2.4 x $(1.8R/t)^{0.3}$

Dimensions in mm

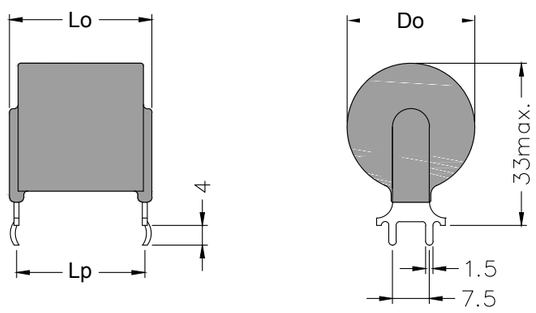

The above spec. sheet features our standard products. For further options please contact your local Miba Resistors representative
sales.mra@miba.com · US: sales@mibaresistors.com

Water Cooled High Power Resistors

Series LCR6000

1/1

The resistor is made of metal alloy structure. Direct water cooling with high purity water (or 50% ethylene glycol) shows better results compared to traditional cooling method. Found applications in electricity generation, transmission or electrical drive system.

Features

- PVDF resistor case and water channel can withstand high pressure, temperature and acid environment to guarantee long-term reliability
- Spiral water channel can reduce water flow resistance. Symmetric metal alloy minimizes the parasitic reactance
- The resistive alloy plate is stamping processed
- The resistor is assembled with special technique to meet the vibration and shocking requirements

Technical Specifications

Resistance value	1 Ω ≤ 130 Ω (others on special request)
Resistance tolerance	±1 % to ±5 %
Temperature coefficient	±150 ppm/°C (referenced to +25°C, ΔR taken at ~+100°C)
Rated power	**Cooling water conductivity:** < 0.5 µs / cm **Cooling water temperature:** outlet temp. ≤ 65°C (avoid boiling) **Cooling water temperature rise:** ΔT = (P x 60) / (L x 4200) P = rated power (W) / L = flow rate (l/min.) With above conditions, when water inlet temperature ≤ 50°C, cooling water temp. rise ≤ 15°C, the flow rate and rated power are as following: 6 l/min: Pmax = 6 kW (inlet/outlet pressure difference ≤ 1.2 bar, ref.) 8 l/min: Pmax = 8 kW (inlet/outlet pressure difference ≤ 1.7 bar, ref.)
Short time overload	1.5 rated power, 5 s, ΔR ≤ ± (1%R + 0.05 Ω)
Dielectric strength voltage	11 kV rms, 50 Hz, 1 min.
Max. peak voltage	8.5 kV
Inductance	≤ 4 mH
Capacitance / mass	≤ 100 pF
Vibration test	amplitude 0.75, frequency 10 ~ 55 Hz, 2 h, ΔR ≤ ± (1%R + 0.05 Ω)
Air distance	> 17 mm
Case material	PVDF CTI ≥ 600, in compliance with UL 94 V-0

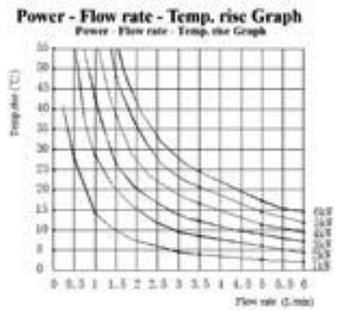

How to make a request

LCR6000_Ohmic Value_Tolerance

For example:
LCR6000 60R 5%

Applicable Standard

- IEC60115-1 : 2001 (GB/T5729-2003)
- MIL-STD-202
- MIL-R-39009D
- Q/EBG007-2012 company standard

Further Option

without threaded bolt for mounting possible (ask for details)

Dimensions in mm

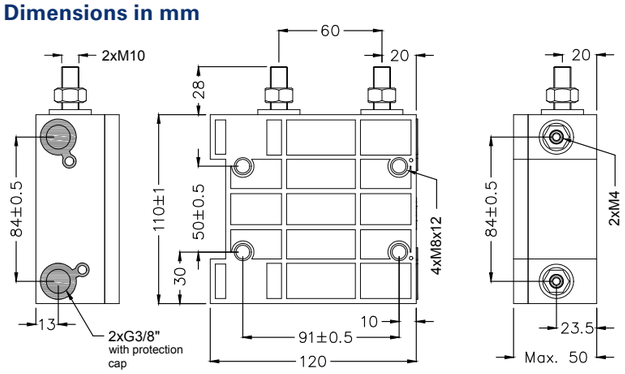

The above spec. sheet features our standard products. For further options please contact your local Miba Resistors representative.
sales.mra@miba.com · US: sales@mibaresistors.com

Series RST5N

100 W Resistor

AEC-Q200 qualified

1/1

The RST5N resistor series is a robust resistor for extreme high Pre-charge pulses. Suitable for high voltages up to 1000V.

Features

- 100 W operating power
- High voltage capable
- Extreme pulse capability
- External cooling possible
- Easy connection via Fast-on
- Robust design

Technical Specifications

Resistance value	25 Ω ≤ 200 Ω (other values on special request)
Resistance tolerance	±5 % to ±10 %
Temperature coefficient	≤ 1000 ppm/°C (referenced to 25 °C, ΔR taken at ~105°C)
Power rating	100 W at 85°C bottom case temperature
Short time overload	2800 W at 70°C for 5s, ΔR = 0.5% max., one time
Maximum operating voltage	≤ 1000 V DC (pre-charge voltage)
Dielectric strength voltage	3 kVrms, 1 min., 50 Hz Leakage current < 1mA
Insulation resistance	500 MΩ at 1000 V, 10s.
Resistor installation	M5 screw, max. torque 3 Nm
Operating temperature	-55°C to + 155°C
Weight	~148,5 g

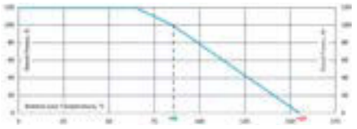

Derating (thermal resist.) RST5N:
1.43 W/K (0.7 K/W)

EBG power resistor cooling requirements

How to make a request

RST5N_Ohmic Value_Tolerance

For example:
RST5N 470R 5%

Dimensions in mm

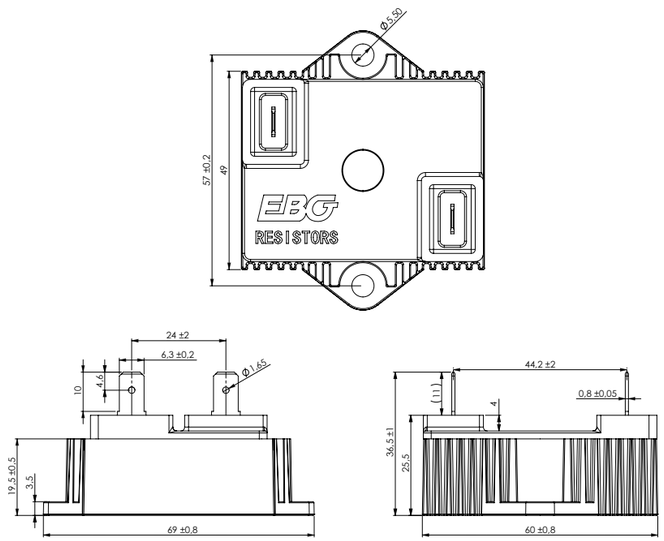

The above spec. sheet features our standard products. For further options please contact your local Miba Resistors representative

sales.mra@miba.com · US: sales@mibaresistors.com

Miba POWERcloser®

EVC-FC

1/1

The areas of application of the Miba POWERcloser® are multifaceted. It can be used at electric vehicle powered by a fuel cell to bring the vehicle in an electrical safe condition in the event of a crash or wherever an emergency shutdown is required. Activated by a single pulse, typically from the airbag control unit, this irreversible device promptly secures into position and remains so. Its compact and lightweight design facilitates rapid operation within milliseconds. Moreover, it finds utility as a bypass switch in various industrial settings.

Benefits

- Hermetically sealed
- High current profile
- Easy and free configurable

Technical Specifications

Feature	Value
Voltage	900 VDC
Closing capability	11,5 kA / I2t ~2 MAs
Non reversable device	Yes
Weight*	~87 g
Ignitor	According to AK-LV16 / USCAR-28

Dimensions in mm (inches)

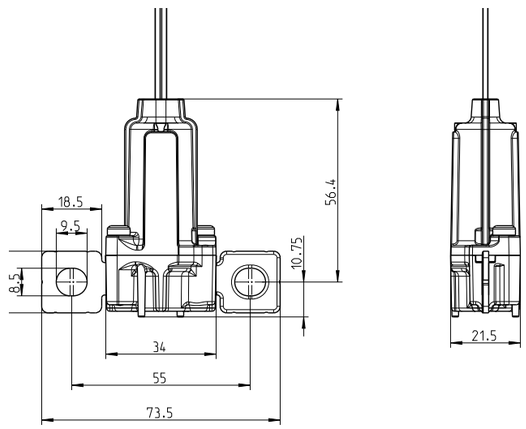

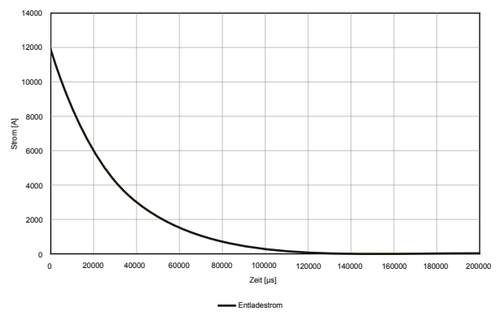

powerelectronics@miba.com

www.miba-resistors.com

Contact details:

Miba Resistors Austria GmbH
Kirchbach 384
8082 Kirchbach-Zerlach
AUSTRIA
T + 43 3116 2625 0
F + 43 3116 2076
sales.mra@miba.com

North American Sales - Distribution
Miba Resistors US LLC
460 Spruce Street
Middletown, PA 17057
USA
T +1 717 737 9877
F +1 717 737 9664
sales@mibaresistors.com